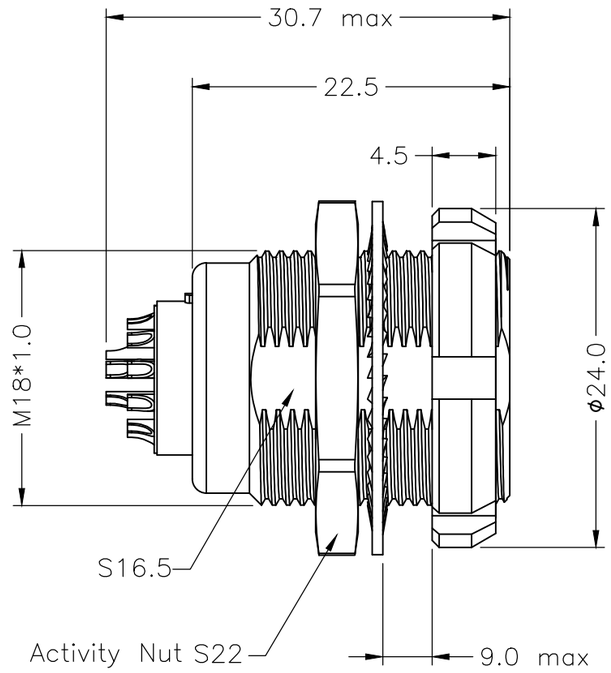

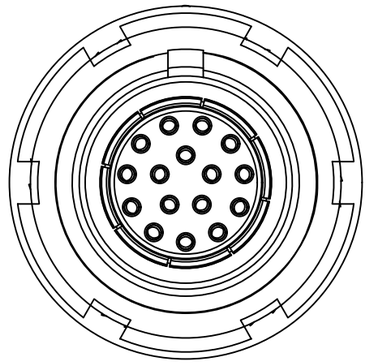

3B METAL CIRCULAR ASSEMBLY P/N DESCRIPTION :

3B A F1 X X XX X 00C
① ② ③ ④

① Insert
P=PEEK
1=PPS

② Plating
2=High Gold
A=Gold flash

③ Number of contacts
02=2Pin
⋮
32=32Pin

④ Keying

G=0°	E=120°
A=30°	F=145°
B=45°	J=37.5°
C=60°	K=52.5°
D=95°	L=70°

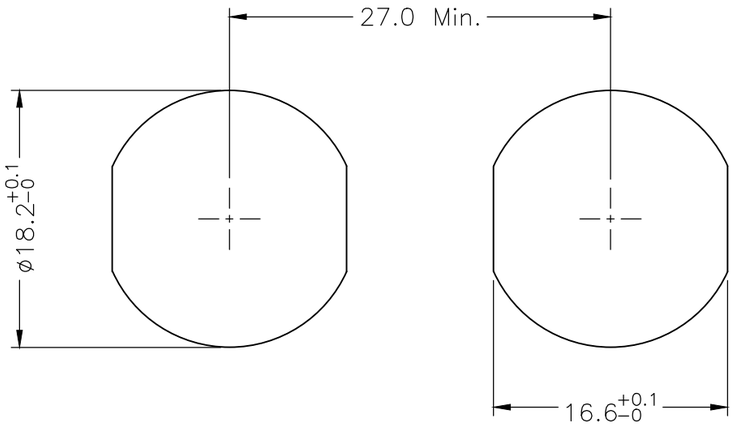

PANEL CUT–OUT

NOTE:

1. MATERIAL:

1.1.SHELL ASSEMBLY: COPPER ALLOY,OUTER SHELL AND COLLET NUT Cr PLATING, OTHER METALLIC COMPONENTS Ni PLATING

1.2.INSERT: THERMOPLASTIC,UL94V–0

1.3.CENTER CONTACT : COPPER ALLOY,Au PLATING

2.NUMBER OF CONTACT : 2 TO 32 POSITION

3.RoHS DIRECTIVE COMPLIANCE

THIRD ANGLE PROJECTION	TOLERANCES UNLESS OTHERWISE SPECIFIED	Dongguan Circon Technology Co.,Ltd.	
UNITS ■ mm □ INCH	0 PLC ± 1.00 1 PLC ± 0.50 2 PLC ± 0.25 3 PLC ± 4 PLC ±	TITLE: 3B METAL CIRCULAR CONNECTOR FIXED SOCKET	
ANGLES 0 PLC ± 3 1 PLC ± 2		C	DRAWING NO. A–M–232 / REV. A0
			PART NO. 3BAF1XXXXX00C
APPROVED BY JACK	DATE 2023–8–11		
CHECKED BY CHARLES	DATE 2023–8–11		
DRAWN BY ANDY	DATE 2023–8–11	SIZE: A3	SCALE: 1:1 / SHEET: 1 OF 3

REV.	REVISION DESCRIPTION	ECR/ECN NO.	DATE

KEYING ANGLES (RECEPTACLE FRONT VIEW):

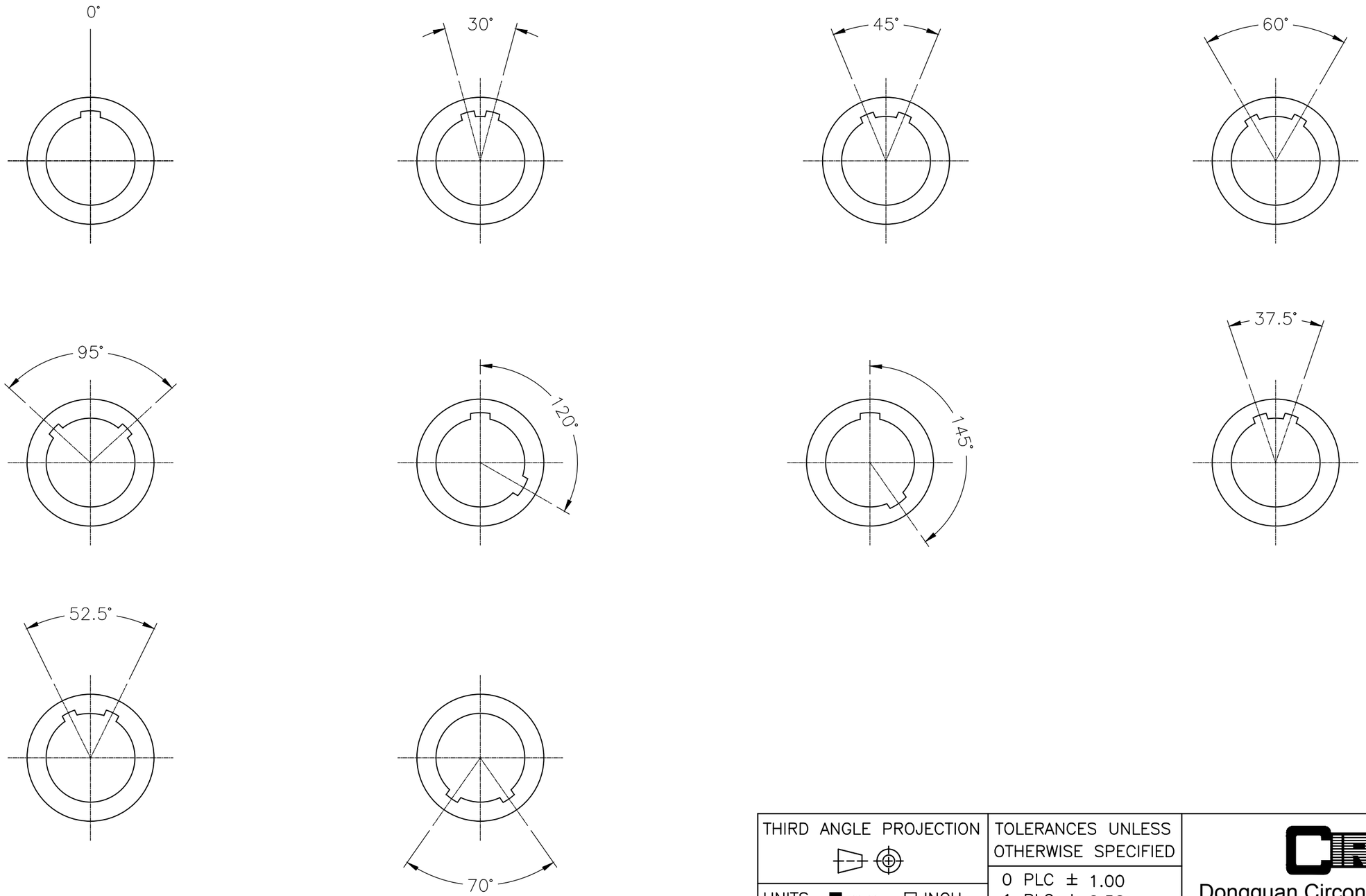

THIRD ANGLE PROJECTION	TOLERANCES UNLESS OTHERWISE SPECIFIED		
UNITS ■ mm □ INCH	0 PLC ± 1.00 1 PLC ± 0.50 2 PLC ± 0.25 3 PLC ± 4 PLC ±		
ANGLES 0 PLC ± 3 1 PLC ± 2			

CIRCON®

Dongguan Circon Technology Co.,Ltd.

TITLE: 3B METAL CIRCULAR CONNECTOR FIXED SOCKET

APPROVED BY	JACK	DATE	2023-8-11
CHECKED BY	CHARLES	DATE	2023-8-11
DRAWN BY	ANDY	DATE	2023-8-11

C	DRAWING NO.	A-M-232	REV. A0
	PART NO.	3BAF1XXXXX00C	
SIZE: A3	SCALE: 1:1	SHEET: 2 OF 3	

REV.	REVISION DESCRIPTION	ECR/ECN NO.	DATE

VIEW FROM TERMINATION SIDE PIN PART

2 POS.

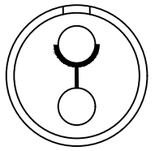

3 POS.



4 POS.

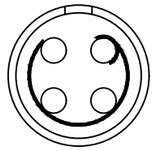

5 POS.

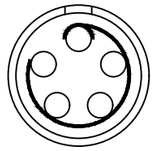

6 POS.

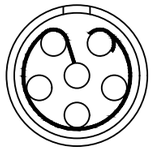

7 POS.

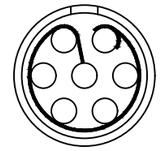

8 POS.

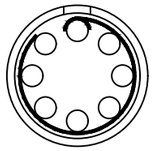

10 POS.



12 POS.

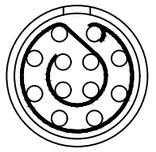

14 POS.



16 POS.

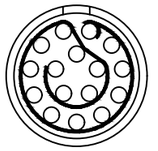

18 POS.

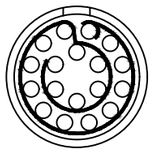

20 POS.

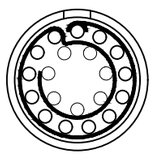

22 POS.



24 POS.



26 POS.

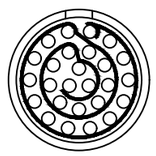

30 POS.

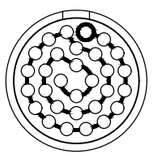

32 POS.

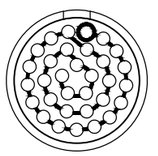

THIRD ANGLE PROJECTION		TOLERANCES UNLESS OTHERWISE SPECIFIED	
UNITS ■ mm □ INCH		0 PLC ± 1.00 1 PLC ± 0.50 2 PLC ± 0.25 3 PLC ± 4 PLC ±	
ANGLES 0 PLC ± 3 1 PLC ± 2			
APPROVED BY	JACK	DATE	2023-8-11
CHECKED BY	CHARLES	DATE	2023-8-11
DRAWN BY	ANDY	DATE	2023-8-11

Dongguan Circon Technology Co.,Ltd.

TITLE: 3B METAL CIRCULAR CONNECTOR FIXED SOCKET

C	DRAWING NO.	A-M-232	REV. A0
	PART NO.	3BAF1XXXXX00C	

REV.	REVISION DESCRIPTION	ECR/ECN NO.	DATE

SIZE: A3 SCALE: 1:1 SHEET: 3 OF 3