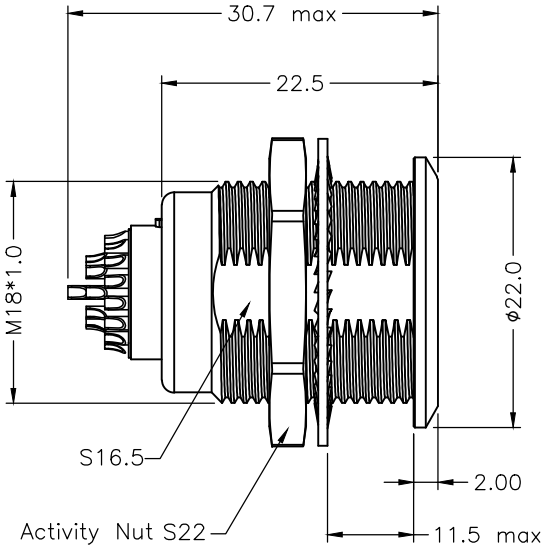

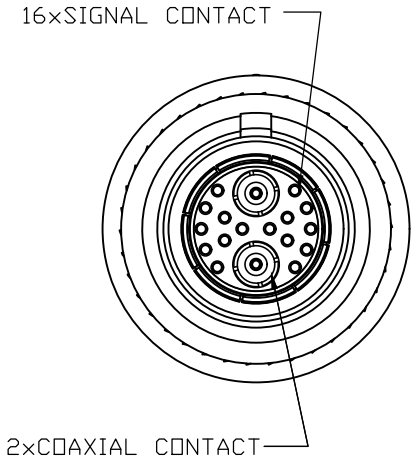

3B METAL CIRCULAR ASSEMBLY P/N DESCRIPTION :

3B A F2 X X XX X 00C
① ② ③ ④

① Insert
P=PEEK
1=PPS

② Plating
2=High Gold
A=Gold flash

③ Number of contacts
A2=16Pin Signal contact+2Pin Coaxial contact

④ Keying

G=0°	E=120°
A=30°	F=145°
B=45°	J=37.5°
C=60°	K=52.5°
D=95°	L=70°

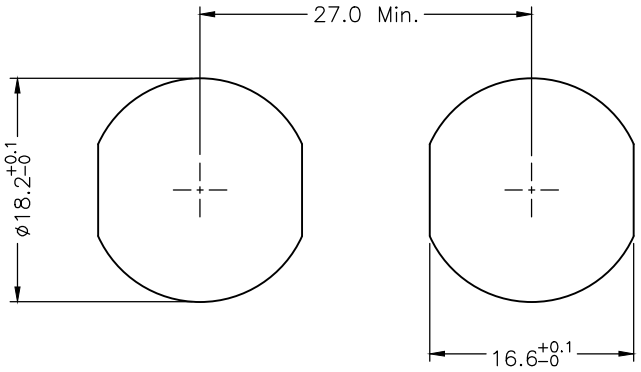

PANEL CUT-OUT

NOTE:

1. MATERIAL:

1.1.SHELL ASSEMBLY: COPPER ALLOY,OUTER SHELL Cr PLATING,
OTHER METALLIC COMPONENTS Ni PLATING

1.2.INSERT: THERMOPLASTIC,UL94V-0

1.3.SIGNAL CONTACT : COPPER ALLOY, Au PLATING

1.4.COAXIAL CONTACT : COPPER ALLOY,Au PLATING

2.NUMBER OF CONTACT :16PIN SIGNAL CONTACT+2PIN COAXIAL CONTACT

3.RoHS DIRECTIVE COMPLIANCE

THIRD ANGLE PROJECTION		TOLERANCES UNLESS OTHERWISE SPECIFIED	
UNITS ■ mm □ INCH		0 PLC ± 1.00 1 PLC ± 0.50 2 PLC ± 0.25 3 PLC ± 4 PLC ±	
ANGLES 0 PLC ± 3 1 PLC ± 2			
APPROVED BY	JACK	DATE	2023-9-11
CHECKED BY	CHARLES	DATE	2023-9-11
DRAWN BY	ANDY	DATE	2023-9-11

Dongguan Circon Technology Co.,Ltd.

TITLE: 3B METAL CIRCULAR CONNECTOR
FIXED SOCKET-2PIN COAXIAL CONTACT

C	DRAWING NO.	A-M-430	REV. A0
	PART NO.	3BAF2XXXXX00C	

REV.	REVISION DESCRIPTION	ECR/ECN NO.	DATE

SIZE: A3 SCALE: 1:1 SHEET: 1 OF 2

KEYING ANGLES (RECEPTACLE FRONT VIEW):

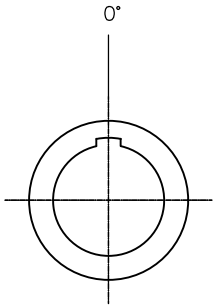

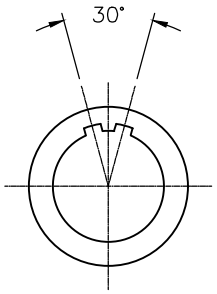

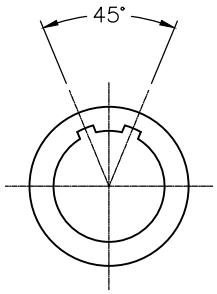

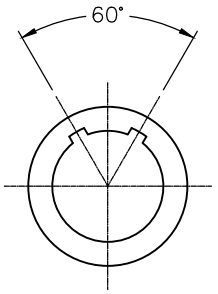

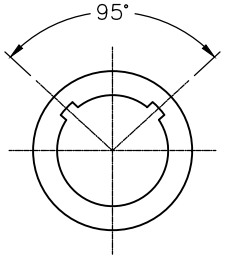

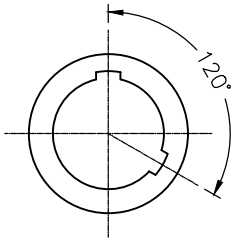

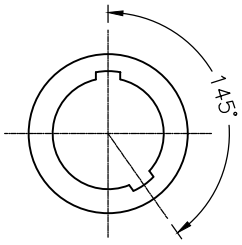

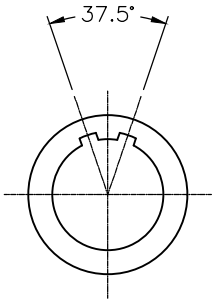

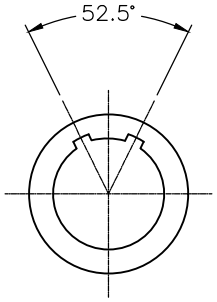

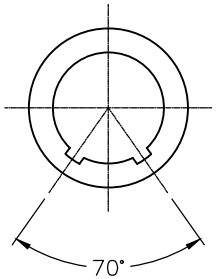

THIRD ANGLE PROJECTION		TOLERANCES UNLESS OTHERWISE SPECIFIED	
UNITS ■ mm □ INCH		0 PLC ± 1.00 1 PLC ± 0.50 2 PLC ± 0.25 3 PLC ± 4 PLC ±	
ANGLES 0 PLC ± 3 1 PLC ± 2			
APPROVED BY	JACK	DATE	2023-9-11
CHECKED BY	CHARLES	DATE	2023-9-11
DRAWN BY	ANDY	DATE	2023-9-11

Dongguan Circon Technology Co.,Ltd.

TITLE: 3B METAL CIRCULAR CONNECTOR
FIXED SOCKET-2PIN COAXIAL CONTACT

C	DRAWING NO.	A-M-430	REV.	A0
	PART NO.	3BAF2XXXXX00C		

SIZE: A3 | SCALE: 1:1 | SHEET: 2 OF 2

REV.	REVISION DESCRIPTION	ECR/ECN NO.	DATE