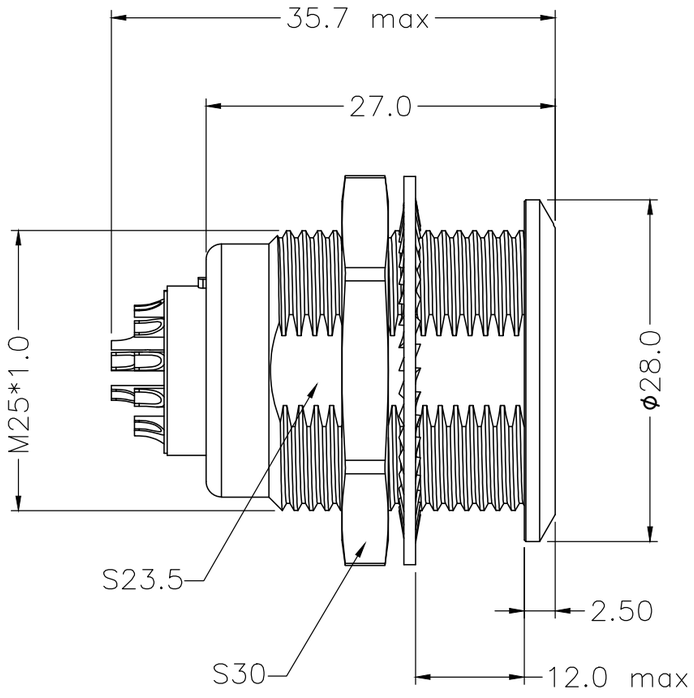

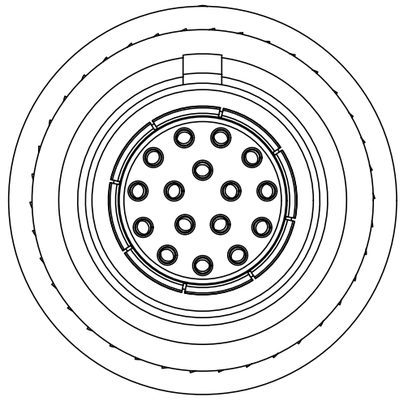

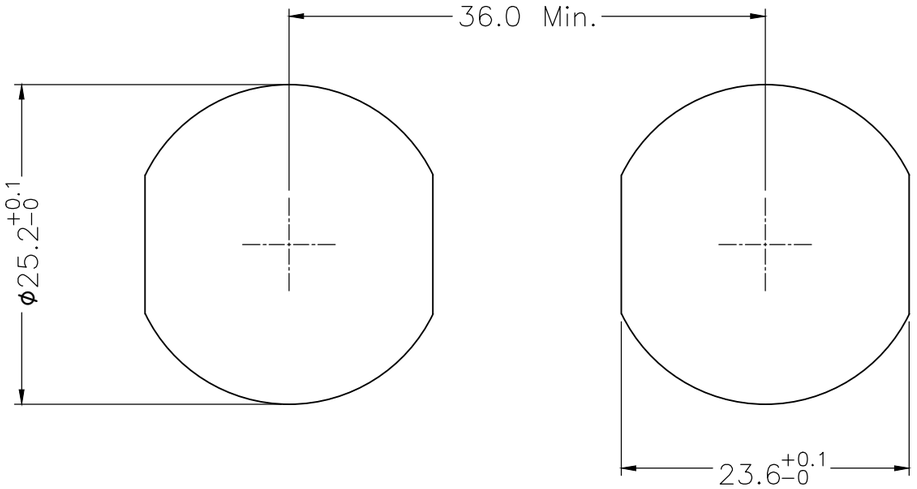

PANEL CUT-OUT

4B METAL CIRCULAR ASSEMBLY P/N DESCRIPTION :

4B A F2 X X XX X 00C
① ② ③ ④

① Insert
P=PEEK
1=PPS

② Plating
2=High Gold
A=Gold flash

③ Number of contacts
04=4Pin
⋮
48=48Pin

④ Keying

G= 0°	E= 120°
A= 30°	F= 145°
B= 45°	J= 37.5°
C= 60°	K= 52.5°
D= 95°	L= 70°

NOTE:

1. MATERIAL:

1.1.SHELL ASSEMBLY: COPPER ALLOY,OUTER SHELL Cr PLATING,
OTHER METALLIC COMPONENTS Ni PLATING

1.2.INSERT: THERMOPLASTIC,UL94V-0

1.3.CENTER CONTACT : COPPER ALLOY,Au PLATING

2.NUMBER OF CONTACT : 4 TO 48 POSITION

3.RoHS DIRECTIVE COMPLIANCE

REV.	REVISION DESCRIPTION	ECR/ECN NO.	DATE

THIRD ANGLE PROJECTION

UNITS ■ mm □ INCH

ANGLES 0 PLC ± 3°
1 PLC ± 2°

TOLERANCES UNLESS OTHERWISE SPECIFIED
0 PLC ± 1.00
1 PLC ± 0.50
2 PLC ± 0.25
3 PLC ±
4 PLC ±

APPROVED BY	JACK	DATE	2023-5-23
CHECKED BY	CHARLES	DATE	2023-5-23
DRAWN BY	ANDY	DATE	2023-5-23

Dongguan Circon Technology Co.,Ltd.

TITLE: 4B METAL CIRCULAR CONNECTOR FIXED SOCKET

C	DRAWING NO.	A-M-388	REV. A0
	PART NO.	4BAF2XXXXX00C	

SIZE: A3 | SCALE: 1:1 | SHEET: 1 OF 3

KEYING (PLUG FRONT VIEW):

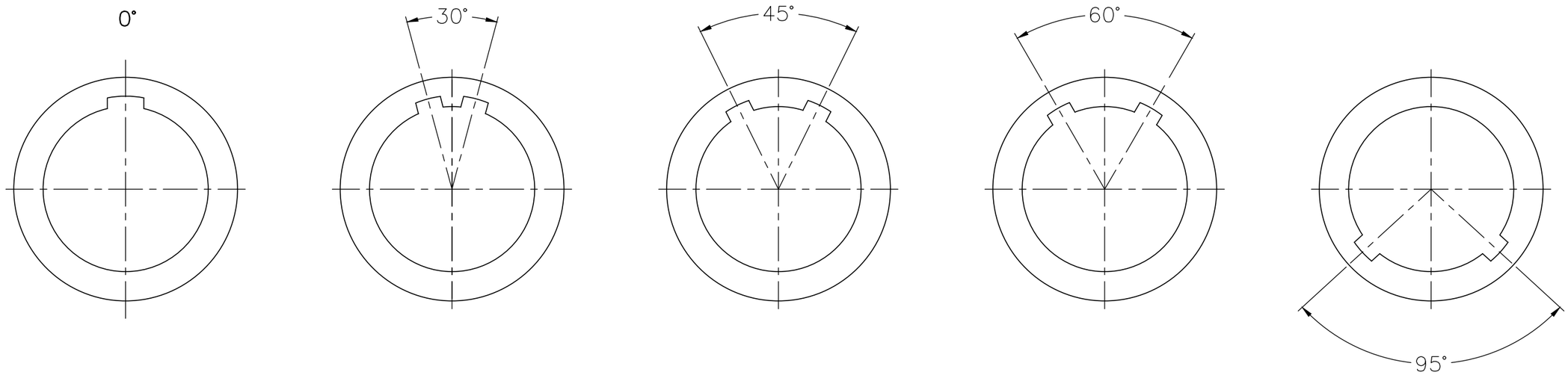

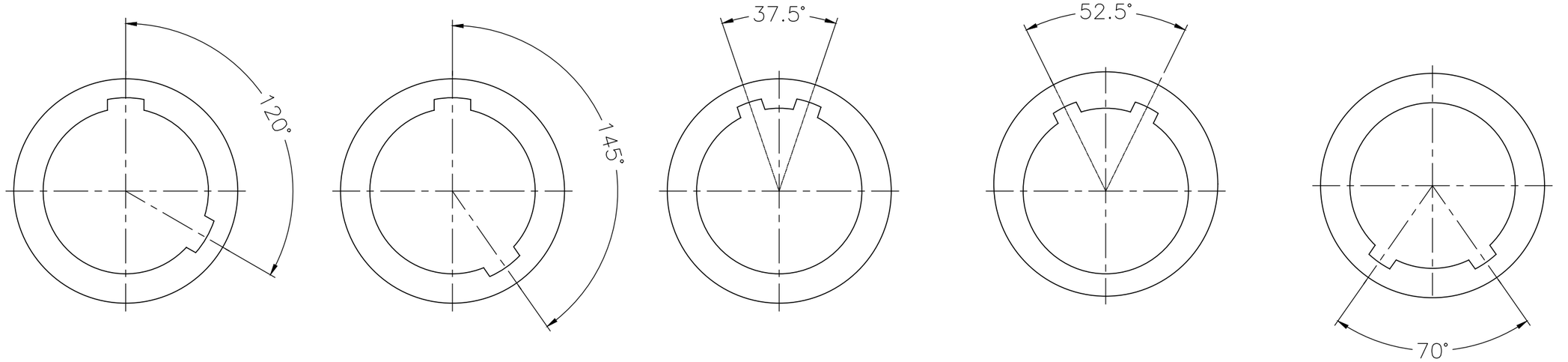

THIRD ANGLE PROJECTION		TOLERANCES UNLESS OTHERWISE SPECIFIED	0 PLC ± 1.00 1 PLC ± 0.50 2 PLC ± 0.25 3 PLC ± 4 PLC ±
UNITS ■ mm □ INCH			
ANGLES 0 PLC ± 3° 1 PLC ± 2°			
APPROVED BY	JACK	DATE	2023-5-23
CHECKED BY	CHARLES	DATE	2023-5-23
DRAWN BY	ANDY	DATE	2023-5-23

Dongguan Circon Technology Co.,Ltd.

TITLE: 4B METAL CIRCULAR CONNECTOR FIXED SOCKET

C	DRAWING NO.	A-M-388	REV. A0
	PART NO.	4BAF2XXXXX00C	
SIZE: A3	SCALE: 1:1	SHEET: 2 OF 3	

REV.	REVISION DESCRIPTION	ECR/ECN NO.	DATE

VIEW FROM TERMINATION SIDE PIN PART

4 POS.

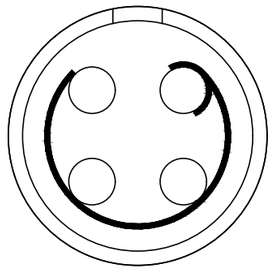

6 POS.

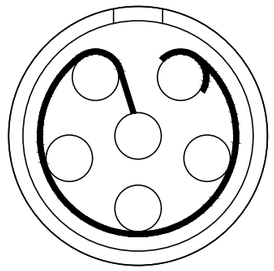

7 POS.

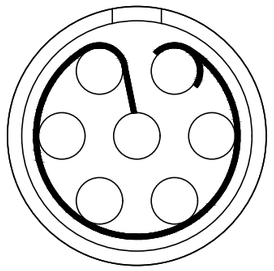

10 POS.

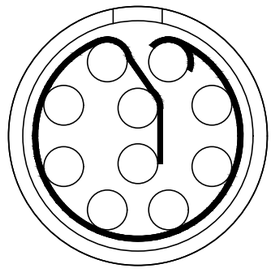

12 POS.

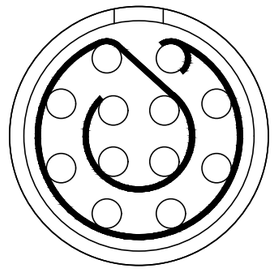

16 POS.

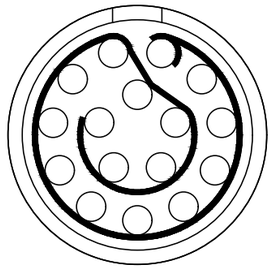

20 POS.

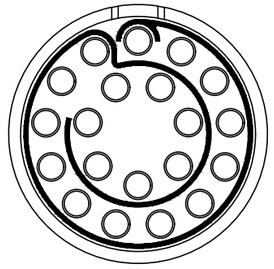

24 POS.

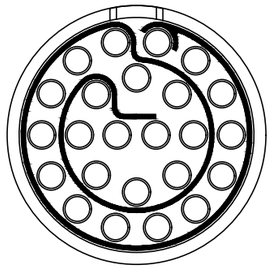

30 POS.

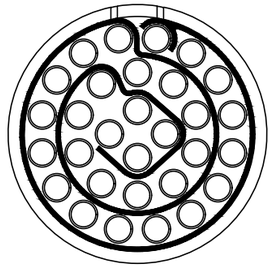

40 POS.

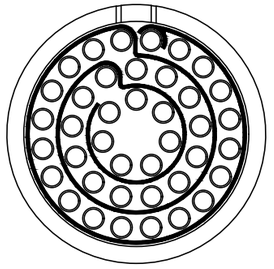

48 POS.

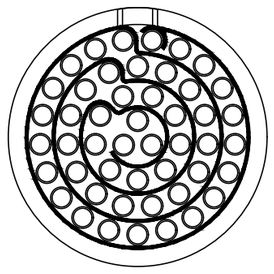

THIRD ANGLE PROJECTION	TOLERANCES UNLESS OTHERWISE SPECIFIED		
UNITS ■ mm □ INCH	0 PLC ± 1.00 1 PLC ± 0.50 2 PLC ± 0.25 3 PLC ± 4 PLC ±		
ANGLES 0 PLC ± 3° 1 PLC ± 2°			
APPROVED BY	JACK	DATE	2023-5-23
CHECKED BY	CHARLES	DATE	2023-5-23
DRAWN BY	ANDY	DATE	2023-5-23

CIRCON®

Dongguan Circon Technology Co.,Ltd.

TITLE: 4B METAL CIRCULAR CONNECTOR FIXED SOCKET

C	DRAWING NO.	A-M-388	REV. A0
	PART NO.	4BAF2XXXXX00C	
SIZE: A3	SCALE: 1:1	SHEET: 3 OF 3	

REV.	REVISION DESCRIPTION	ECR/ECN NO.	DATE