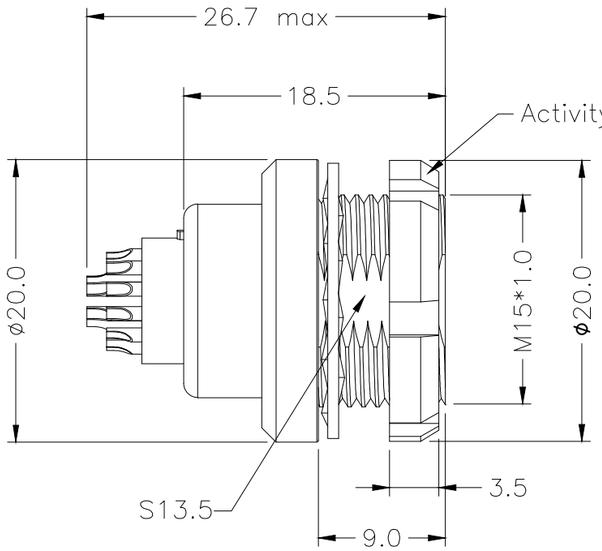

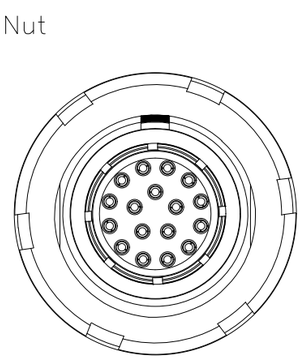

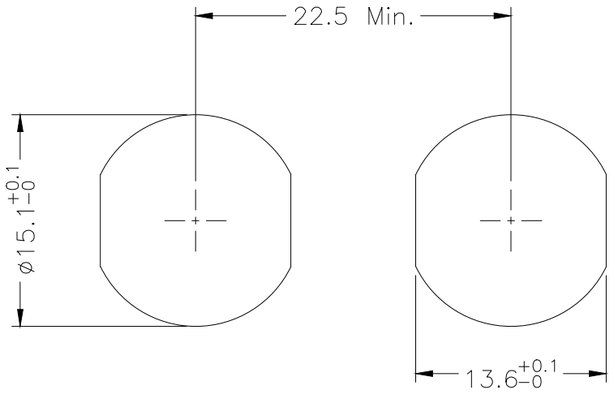

PANEL CUT−OUT

2B METAL CIRCULAR ASSEMBLY P/N DESCRIPTION :

2B A F3 X X XX X 00C
① ② ③ ④

① Insert
P=PEEK
1=PPS

② Plating
2=High Gold
A=Gold flash

③ Number of contacts
02=2Pin
⋮
32=32Pin

④ Keying

G=0°	E=120°
A=30°	F=145°
B=45°	J=37.5°
C=60°	K=52.5°
D=95°	L=70°

NOTE:

1. MATERIAL:

1.1.SHELL ASSEMBLY: COPPER ALLOY,OUTER SHELL AND COLLET NUT Cr PLATING, OTHER METALLIC COMPONENTS Ni PLATING

1.2.INSERT: THERMOPLASTIC,UL94V−0

1.3.CENTER CONTACT : COPPER ALLOY,Au PLATING

2.NUMBER OF CONTACT : 2 TO 32 POSITION

3.RoHS DIRECTIVE COMPLIANCE

REV.	REVISION DESCRIPTION	ECR/ECN NO.	DATE

THIRD ANGLE PROJECTION

UNITS ■ mm □ INCH

ANGLES 0 PLC ± 3
1 PLC ± 2

TOLERANCES UNLESS OTHERWISE SPECIFIED
0 PLC ± 1.00
1 PLC ± 0.50
2 PLC ± 0.25
3 PLC ±
4 PLC ±

APPROVED BY	JACK	DATE	2020−6−18
CHECKED BY	CHARLES	DATE	2020−6−18
DRAWN BY	ANDY	DATE	2020−6−18

Dongguan Circon Technology Co.,Ltd.

TITLE: 2B METAL CIRCULAR CONNECTOR FIXED SOCKET

C	DRAWING NO.	A−M−132	REV. A0
	PART NO.	2BAF3XXXXX00C	

SIZE: A3 | SCALE: 1:1 | SHEET: 1 OF 3

KEYING ANGLES (RECEPTACLE FRONT VIEW):

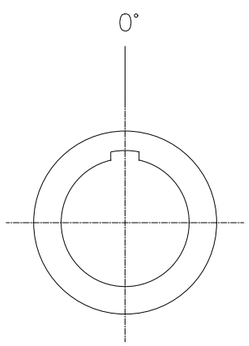

G

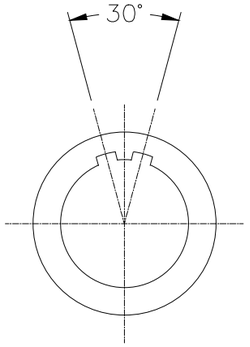

A

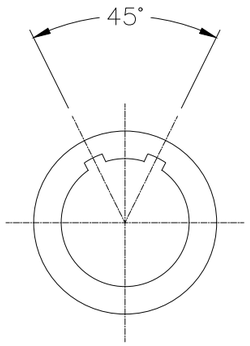

B

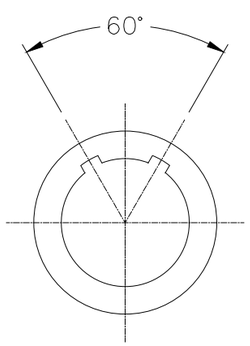

C

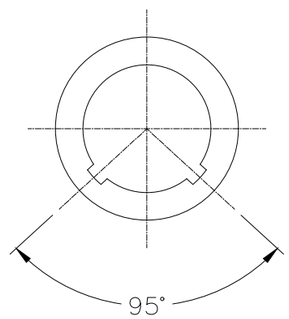

D

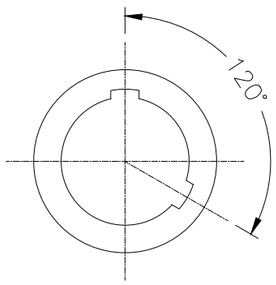

E

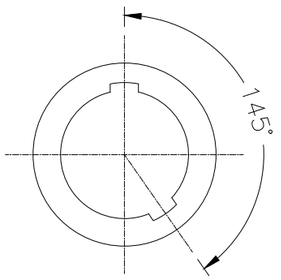

F

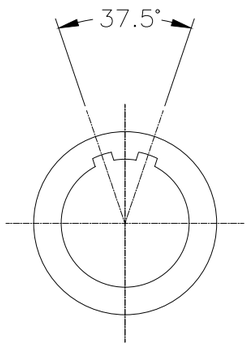

J

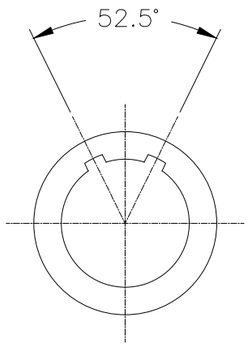

K

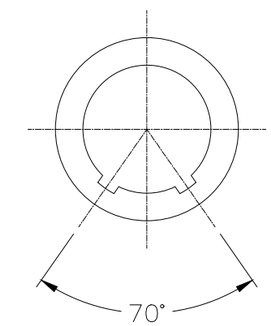

L

THIRD ANGLE PROJECTION		TOLERANCES UNLESS OTHERWISE SPECIFIED		Dongguan Circon Technology Co.,Ltd.			
UNITS ■ mm □ INCH		0 PLC ± 1.00 1 PLC ± 0.50 2 PLC ± 0.25 3 PLC ± 4 PLC ±		TITLE: 2B METAL CIRCULAR CONNECTOR FIXED SOCKET			
ANGLES 0 PLC ± 3 1 PLC ± 2				C	DRAWING NO.	A–M–132	REV. A0
					PART NO.	2BAF3XXXXX00C	
APPROVED BY	JACK	DATE	2020–6–18				
CHECKED BY	CHARLES	DATE	2020–6–18				
DRAWN BY	ANDY	DATE	2020–6–18	SIZE: A3	SCALE: 1:1	SHEET: 2 OF 3	

REV.	REVISION DESCRIPTION	ECR/ECN NO.	DATE

VIEW FROM TERMINATION SIDE PIN PART

2 POS.

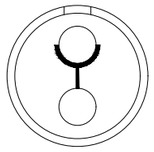

3 POS.



4 POS.



5 POS.

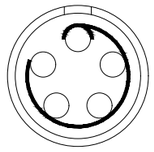

6 POS.

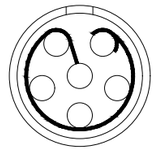

7 POS.

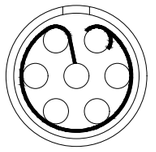

8 POS.

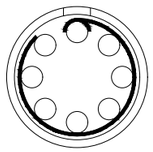

10 POS.



12 POS.



14 POS.



16 POS.



18 POS.



19 POS.



26 POS.



32 POS.

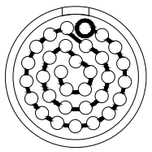

THIRD ANGLE PROJECTION		TOLERANCES UNLESS OTHERWISE SPECIFIED	
UNITS ■ mm □ INCH		0 PLC ± 1.00 1 PLC ± 0.50 2 PLC ± 0.25 3 PLC ± 4 PLC ±	
ANGLES 0 PLC ± 3 1 PLC ± 2			
APPROVED BY	JACK	DATE	2020-6-18
CHECKED BY	CHARLES	DATE	2020-6-18
DRAWN BY	ANDY	DATE	2020-6-18

CIRCON®

Dongguan Circon Technology Co.,Ltd.

TITLE: 2B METAL CIRCULAR CONNECTOR FIXED SOCKET

C	DRAWING NO.	A-M-132	REV. A0
	PART NO.	2BAF3XXXXX00C	

REV.	REVISION DESCRIPTION	ECR/ECN NO.	DATE

SIZE: A3 | SCALE: 1:1 | SHEET: 3 OF 3