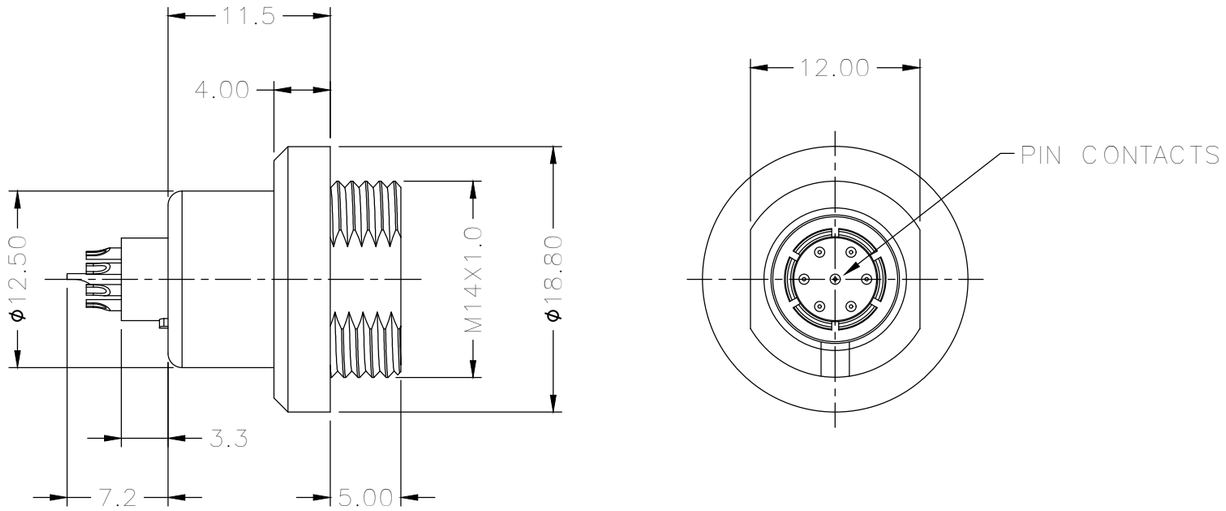

1B METAL CIRCULAR CONNECTOR

NOTE:

1. MATERIAL:

1.1.SHELL ASSEMBLY: COPPER ALLOY,OUTER SHELL Cr PLATING, OTHER METALLIC COMPONENTS Ni PLATING

1.2.INSERT: THERMOPLASTIC,UL94V-0

1.3.CENTER CONTACT : COPPER ALLOY,Au PLATING

2. RoHS DIRECTIVE COMPLIANCE

3. CONNECTOR AND BUSHING MATCHING SHIPMENT

4. 1B METAL CIRCULAR ASSEMBLY P/N DESCRIPTION :

1BAF6 X X 07G00C
①②

① Insert
P=PEEK
1=PPS

② Plating
2=High Gold
A=Gold flash

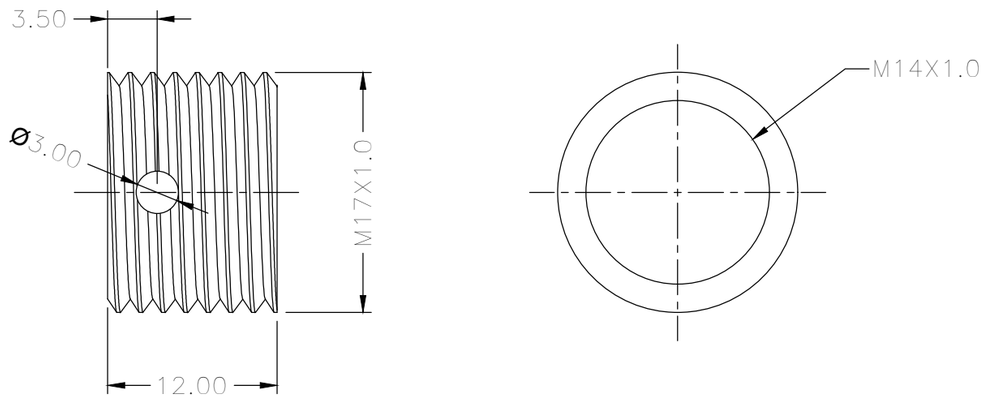

CONNECTOR BUSHING

THIRD ANGLE PROJECTION		TOLERANCES UNLESS OTHERWISE SPECIFIED	
UNITS ■ mm □ INCH		0 PLC ± 1.00 1 PLC ± 0.50 2 PLC ± 0.25 3 PLC ± 4 PLC ±	
ANGLES 0 PLC ± 3 1 PLC ± 2			
APPROVED BY	JACK	DATE	2019-7-23
CHECKED BY	CHARLES	DATE	2019-7-23
DRAWN BY	ANDY	DATE	2019-7-23

Dongguan Circon Technology Co.,Ltd.

TITLE: 1B METAL CIRCULAR CONNECTOR FIXED SOCKET/PIN CONTACTS

C	DRAWING NO.	A-M-094	REV. A0
	PART NO.	1BAF6XX07G00C	
SIZE: A3	SCALE: 1:1	SHEET: 1 OF 1	

REV.	REVISION DESCRIPTION	ECR/ECN NO.	DATE