1B METAL CIRCULAR ASSEMBLY P/N DESCRIPTION :

1B A FH X X XX X 00C
①②③④

① Insert
P=PEEK
1=PPS

② Plating
2=High Gold
A=Gold flash

③ Number of contacts
02=2Pin
⋮
10=10Pin

④ Keying

G= 0°	E= 145°
A= 30°	F= 155°
B= 60°	J= 45°
C= 90°	K= 70°
D= 135°	L= 80°

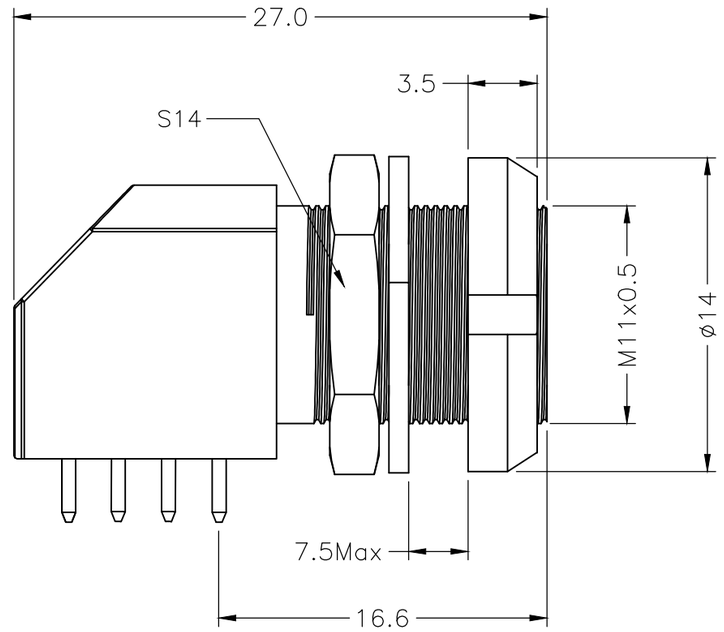

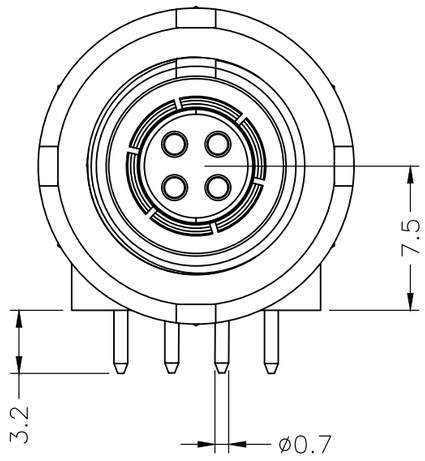

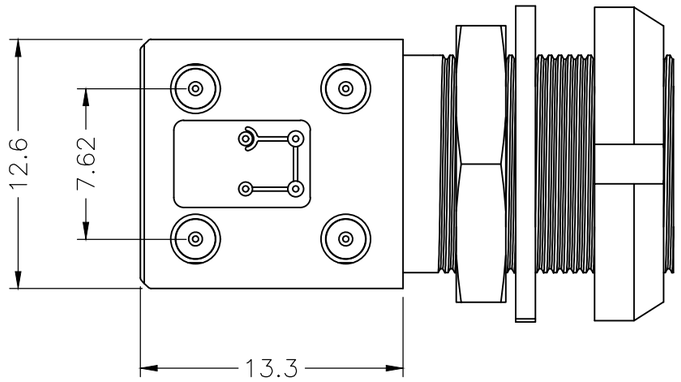

NOTE:

1. MATERIAL:

1.1.SHELL ASSEMBLY: COPPER ALLOY,OUTER SHELL AND COLLET NUT Cr PLATING, OTHER METALLIC COMPONENTS Ni PLATING

1.2.INSERT: THERMOPLASTIC,UL94V-0

1.3.CENTER CONTACT : COPPER ALLOY,Au PLATING

2.NUMBER OF CONTACT : 2 TO 10 POSITION

3.RoHS DIRECTIVE COMPLIANCE

REV.	REVISION DESCRIPTION	ECR/ECN NO.	DATE

THIRD ANGLE PROJECTION

UNITS ■ mm □ INCH

ANGLES 0 PLC ± 3
1 PLC ± 2

TOLERANCES UNLESS OTHERWISE SPECIFIED
0 PLC ± 1.00
1 PLC ± 0.50
2 PLC ± 0.25
3 PLC ±
4 PLC ±

APPROVED BY	JACK	DATE	2024-4-17
CHECKED BY	CHARLES	DATE	2024-4-17
DRAWN BY	ANDY	DATE	2024-4-17

CIRCON®
Dongguan Circon Technology Co.,Ltd.

TITLE: 1B METAL CIRCULAR CONNECTOR ELBOW (90°) SOCKET

C	DRAWING NO.	A-M-313	REV. A0
	PART NO.	1BAFHXXXXX00C	

SIZE: A3 | SCALE: 1:1 | SHEET: 1 OF 3

KEYING ANGLES (RECEPTACLE FRONT VIEW):

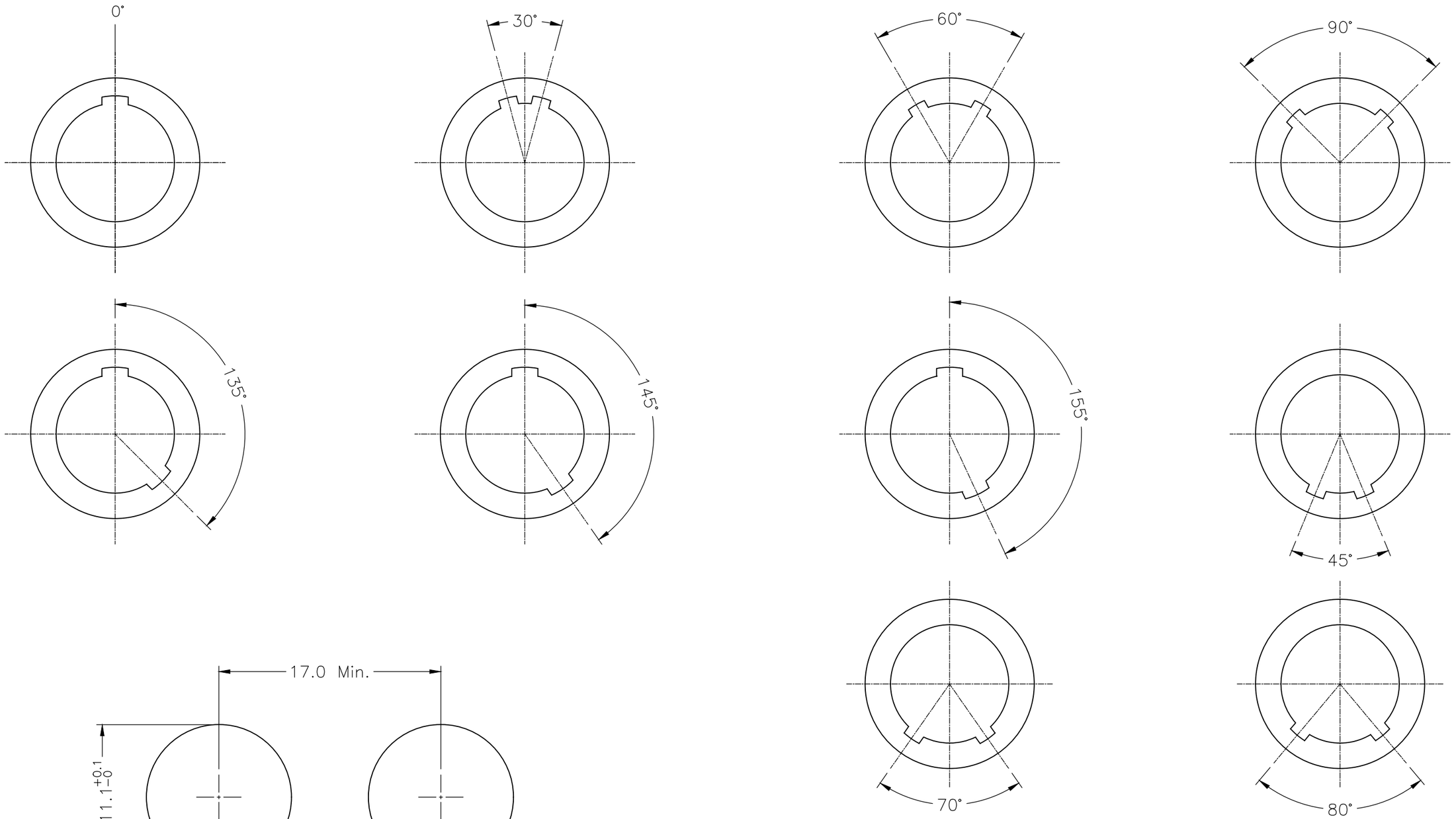

PANEL CUT–OUT

THIRD ANGLE PROJECTION	TOLERANCES UNLESS OTHERWISE SPECIFIED
UNITS ■ mm □ INCH	0 PLC ± 1.00 1 PLC ± 0.50 2 PLC ± 0.25 3 PLC ± 4 PLC ±
ANGLES 0 PLC ± 3 1 PLC ± 2	

Dongguan Circon Technology Co.,Ltd.

TITLE: 1B METAL CIRCULAR CONNECTOR ELBOW (90°) SOCKET

APPROVED BY	JACK	DATE	2024–4–17	C	DRAWING NO. A–M–313 REV. A0
CHECKED BY	CHARLES	DATE	2024–4–17		PART NO. 1BAFHXXXXX00C
DRAWN BY	ANDY	DATE	2024–4–17	SIZE: A3	SCALE: 1:1 SHEET: 2 OF 3

REV.	REVISION DESCRIPTION	ECR/ECN NO.	DATE

PCB DRILLING PATTEN

02PIN

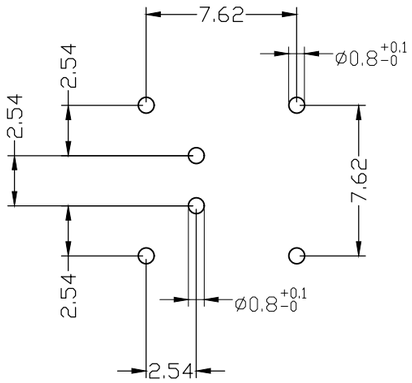

03PIN

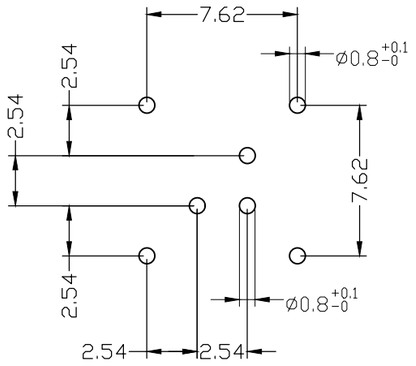

04PIN

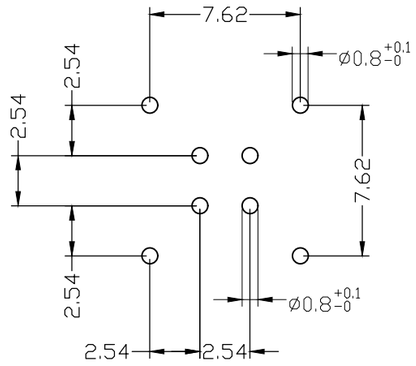

05PIN

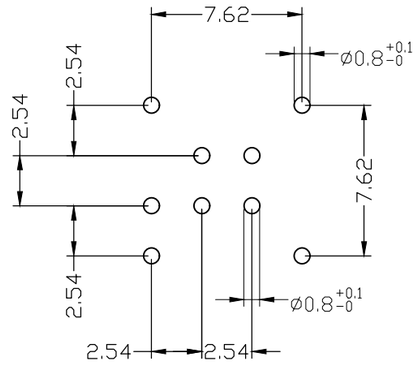

06PIN

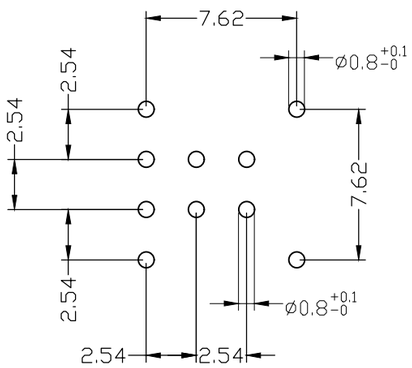

07PIN

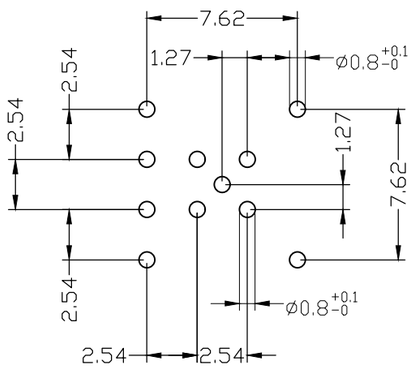

08PIN

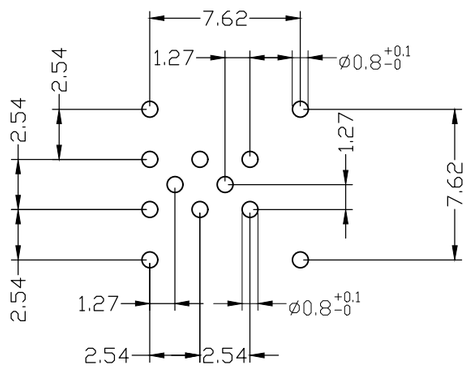

10PIN

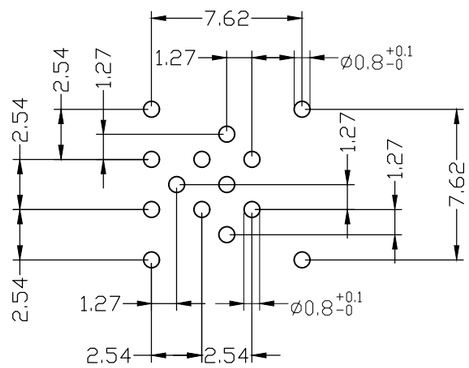

VIEW FROM TERMINATION SIDE PIN PART

02 PIN

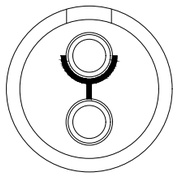

03 PIN

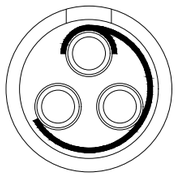

04 PIN

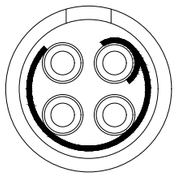

05 PIN

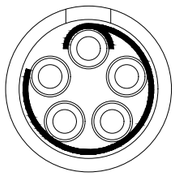

06 PIN

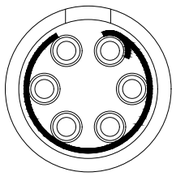

07 PIN

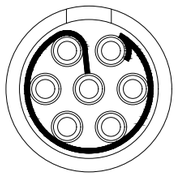

8 PIN

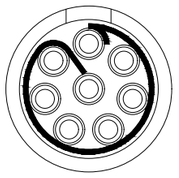

10 PIN

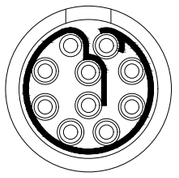

THIRD ANGLE PROJECTION		TOLERANCES UNLESS OTHERWISE SPECIFIED		Dongguan Circon Technology Co.,Ltd.					
UNITS ■ mm □ INCH		0 PLC ± 1.00 1 PLC ± 0.50 2 PLC ± 0.25 3 PLC ± 4 PLC ±		TITLE: 1B METAL CIRCULAR CONNECTOR ELBOW (90°) SOCKET					
ANGLES 0 PLC ± 3 1 PLC ± 2				C	DRAWING NO.	A-M-313	REV.	A0	
APPROVED BY	JACK	DATE	2024-4-17		PART NO.	1BAFHXXXXX00C			
CHECKED BY	CHARLES	DATE	2024-4-17						
DRAWN BY	ANDY	DATE	2024-4-17	SIZE: A3	SCALE: 1:1	SHEET: 3 OF 3			

REV.	REVISION DESCRIPTION	ECR/ECN NO.	DATE