NOTE:

1. MATERIAL:

1.1.SHELL ASSEMBLY: COPPER ALLOY,OUTER SHELL AND ACTIVITY NUT CR PLATING, OTHER METALLIC COMPONENTS Ni PLATING

1.2.INSERT: THERMOPLASTIC,UL94V-0

1.3.CENTER CONTACT : COPPER ALLOY,Au PLATING

2.NUMBER OF CONTACT : 2 TO 32 POSITION

3.RoHS DIRECTIVE COMPLIANCE

4.2B METAL CIRCULAR ASSEMBLY P/N DESCRIPTION :

2B A FM X X XX X 00C
① ② ③ ④

① Insert
P=PEEK
1=PPS

② Plating
2=High Gold
A=Gold flash

③ Number of contacts
02=2Pin
⋮
32=32Pin

④ Keying

| | |
|---|---|
| G= 0° | E=120° |
| A=30° | F=145° |
| B=45° | J=37.5° |
| C=60° | K=52.5° |
| D=95° | L=70° |

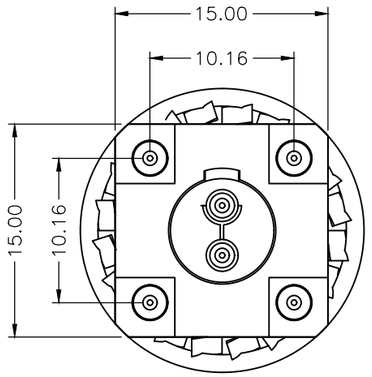


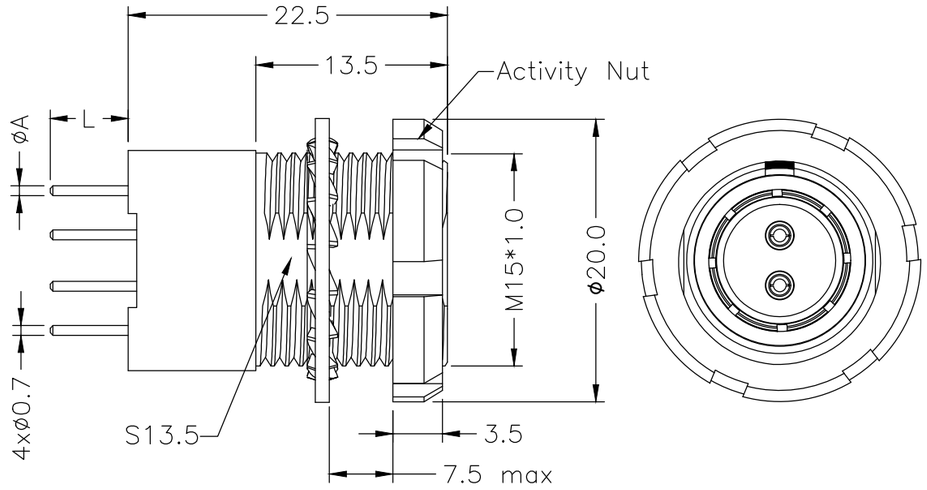


| POSITION | 2~19 | 26&32 |
|---|---|---|
| øA | 0.70 | 0.50 |
| L | 5.5 | 3.5 |

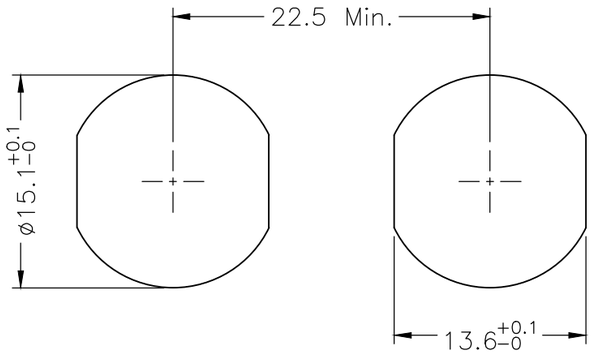


PANEL CUT-OUT

| REV. | REVISION DESCRIPTION | ECR/ECN NO. | DATE |
|---|---|---|---|

THIRD ANGLE PROJECTION

UNITS ■ mm □ INCH

ANGLES 0 PLC ± 3
1 PLC ± 2

TOLERANCES UNLESS OTHERWISE SPECIFIED
0 PLC ± 1.00
1 PLC ± 0.50
2 PLC ± 0.25
3 PLC ±
4 PLC ±

| | | | |
|---|---|---|---|
| APPROVED BY | JACK | DATE | 2025-5-22 |
| CHECKED BY | CHARLES | DATE | 2025-5-22 |
| DRAWN BY | ANDY | DATE | 2025-5-22 |

CIRCON®
Dongguan Circon Technology Co.,Ltd.

TITLE: 2B METAL CIRCULAR CONNECTOR FIXED SOCKET-PCB CONTACTS

| | | | |
|---|---|---|---|
| C | DRAWING NO. | A-M-660 | REV. A0 |
| | PART NO. | 2BAFMXXXXXX0C | |

SIZE: A3 | SCALE: 1:1 | SHEET: 1 OF 5

KEYING ANGLES (RECEPTACLE FRONT VIEW):

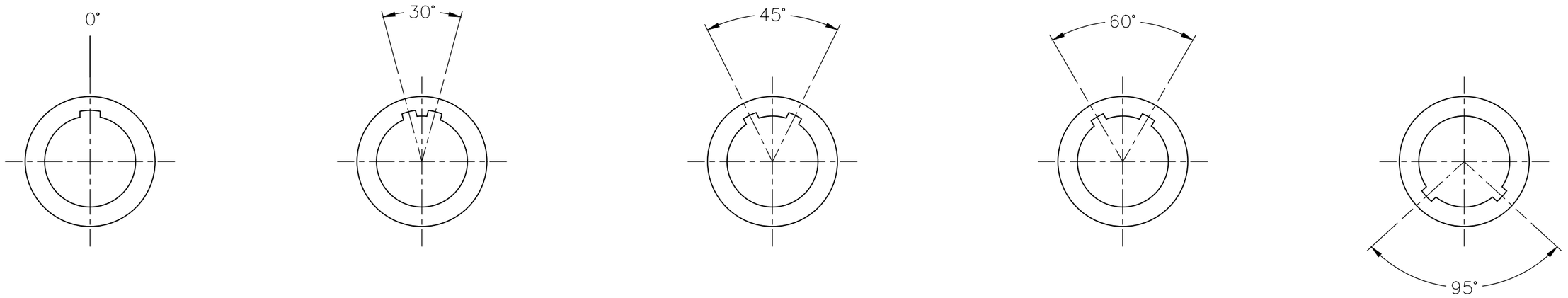


| | | | |
|---|---|---|---|
| THIRD ANGLE PROJECTION | | TOLERANCES UNLESS OTHERWISE SPECIFIED | |
| UNITS ■ mm □ INCH | | 0 PLC ± 1.00<br>1 PLC ± 0.50<br>2 PLC ± 0.25<br>3 PLC ±<br>4 PLC ± | |
| ANGLES 0 PLC ± 3<br>1 PLC ± 2 | | | |
| APPROVED BY | JACK | DATE | 2025-5-22 |
| CHECKED BY | CHARLES | DATE | 2025-5-22 |
| DRAWN BY | ANDY | DATE | 2025-5-22 |

Dongguan Circon Technology Co.,Ltd.

TITLE: 2B METAL CIRCULAR CONNECTOR FIXED SOCKET-PCB CONTACTS

| | | | |
|---|---|---|---|
| C | DRAWING NO. | A-M-660 | REV. A0 |
| | PART NO. | 2BAFMXXXXXX0C | |

SIZE: A3 | SCALE: 1:1 | SHEET: 2 OF 5

| REV. | REVISION DESCRIPTION | ECR/ECN NO. | DATE |
|---|---|---|---|

VIEW FROM TERMINATION SIDE PIN PART

2 POS.

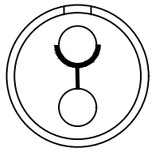

3 POS.



4 POS.

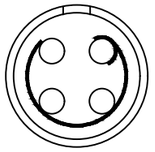

5 POS.

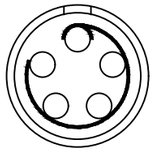

6 POS.

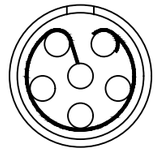

7 POS.

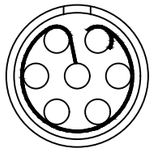

8 POS.

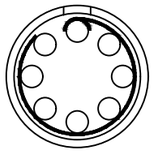

10 POS.

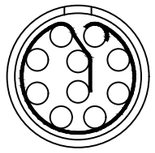

12 POS.

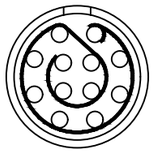

14 POS.



16 POS.



18 POS.

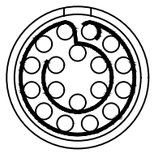

19 POS.

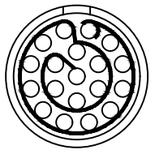

26 POS.

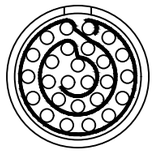

32 POS.

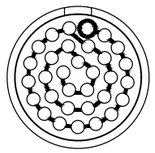

| | | | | | | | |
|---|---|---|---|---|---|---|---|
| THIRD ANGLE PROJECTION | | TOLERANCES UNLESS OTHERWISE SPECIFIED | | Dongguan Circon Technology Co.,Ltd. | | | |
| UNITS ■ mm □ INCH | | 0 PLC ± 1.00<br>1 PLC ± 0.50<br>2 PLC ± 0.25<br>3 PLC ±<br>4 PLC ± | | TITLE: 2B METAL CIRCULAR CONNECTOR FIXED SOCKET–PCB CONTACTS | | | |
| ANGLES 0 PLC ± 3<br>1 PLC ± 2 | | | | C | DRAWING NO. | A–M–660 | REV. A0 |
| APPROVED BY | JACK | DATE | 2025–5–22 | | PART NO. | 2BAFMXXXXXX0C | |
| CHECKED BY | CHARLES | DATE | 2025–5–22 | | | | |
| DRAWN BY | ANDY | DATE | 2025–5–22 | SIZE: A3 | SCALE: 1:1 | SHEET: 3 OF 5 | |

| REV. | REVISION DESCRIPTION | ECR/ECN NO. | DATE |
|---|---|---|---|

PCB DRILLING PATTEN

2 POS.

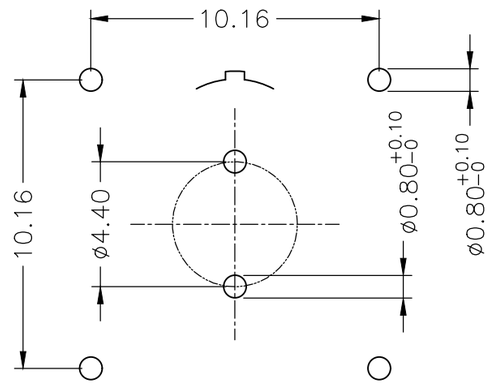


3 POS.

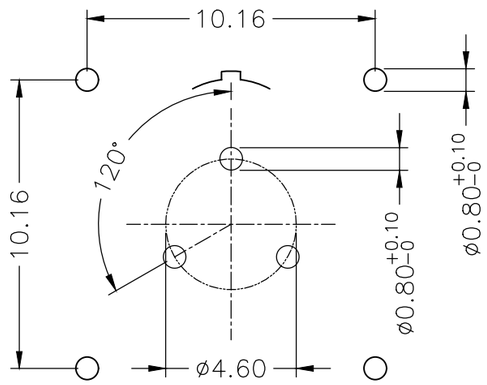


4 POS.

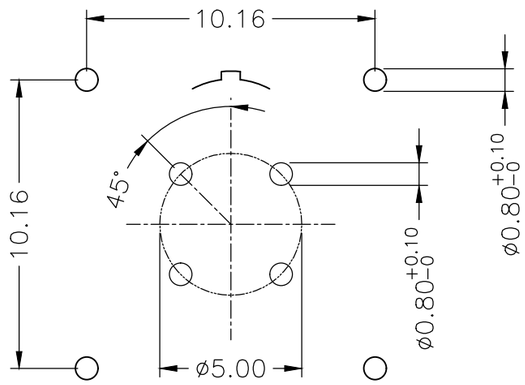


5 POS.

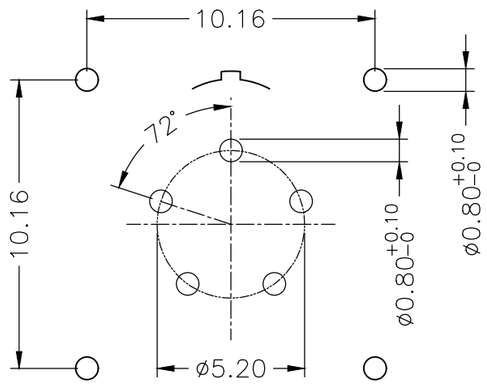


6 POS.

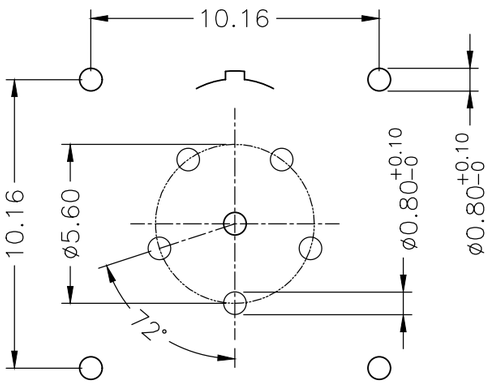


7 POS.

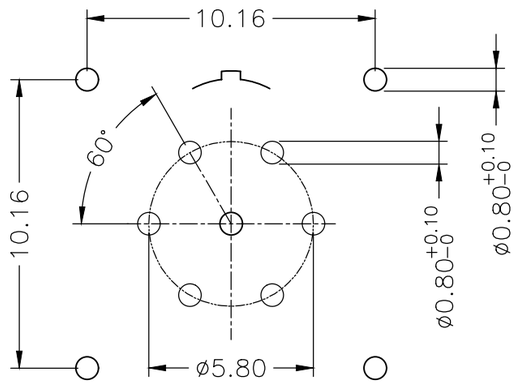


8 POS.

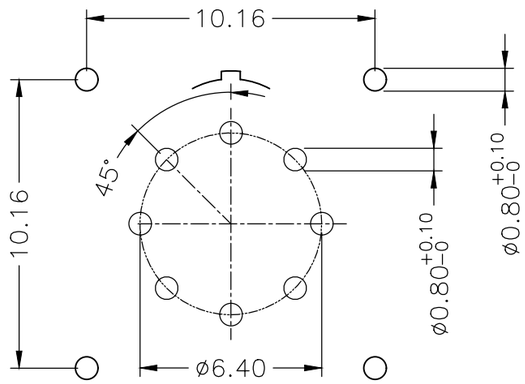


10 POS.

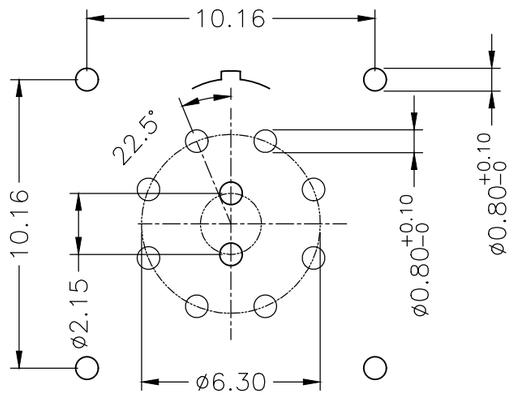


| | | | |
|---|---|---|---|
| THIRD ANGLE PROJECTION | | TOLERANCES UNLESS OTHERWISE SPECIFIED | |
| UNITS ■ mm □ INCH | | 0 PLC ± 1.00<br>1 PLC ± 0.50<br>2 PLC ± 0.25<br>3 PLC ±<br>4 PLC ± | |
| ANGLES 0 PLC ± 3<br>1 PLC ± 2 | | | |
| APPROVED BY | JACK | DATE | 2025-5-22 |
| CHECKED BY | CHARLES | DATE | 2025-5-22 |
| DRAWN BY | ANDY | DATE | 2025-5-22 |

CIRCON®

Dongguan Circon Technology Co.,Ltd.

TITLE: 2B METAL CIRCULAR CONNECTOR FIXED SOCKET-PCB CONTACTS

| | | | |
|---|---|---|---|
| C | DRAWING NO. | A-M-660 | REV. A0 |
| | PART NO. | 2BAFMXXXXXX0C | |

| REV. | REVISION DESCRIPTION | ECR/ECN NO. | DATE |
|---|---|---|---|

SIZE: A3 SCALE: 1:1 SHEET: 4 OF 5

PCB DRILLING PATTEN

12 POS.

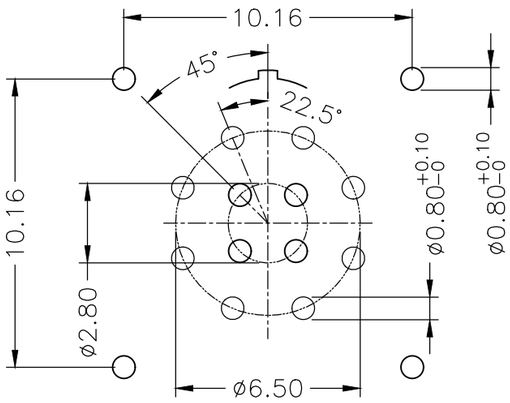


14 POS.

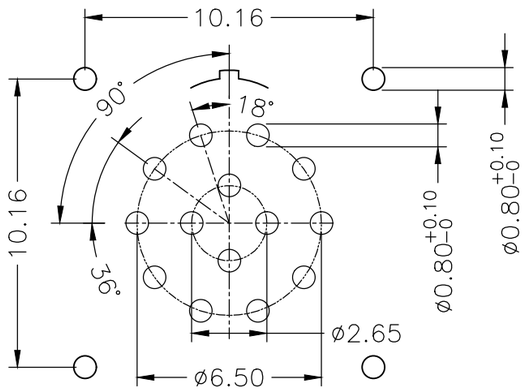


16 POS.

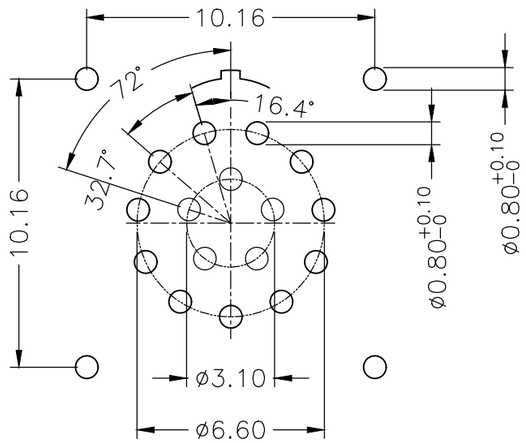


18 POS.

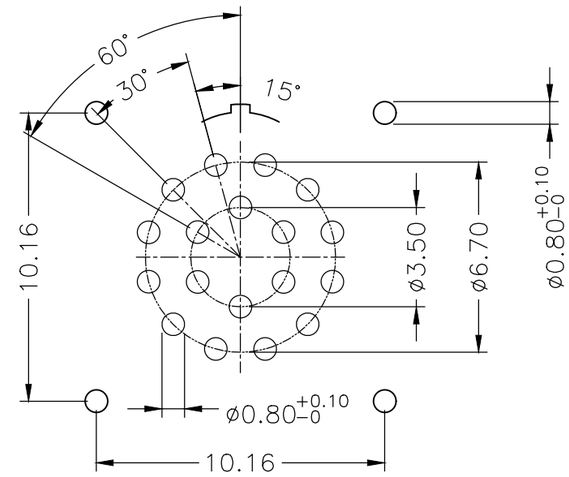


19 POS.

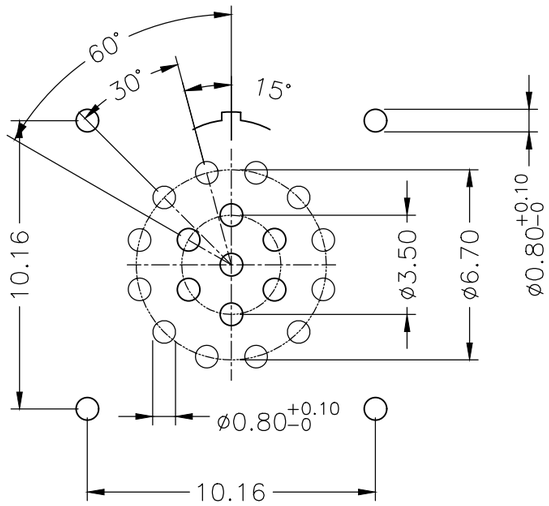


26 POS.

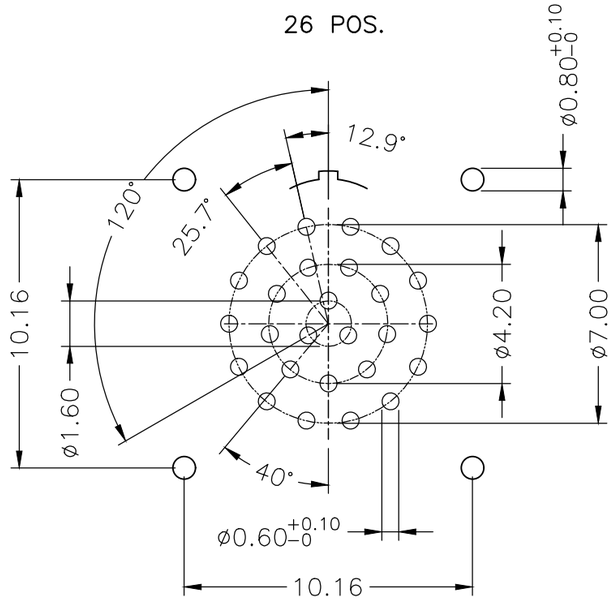


32 POS.

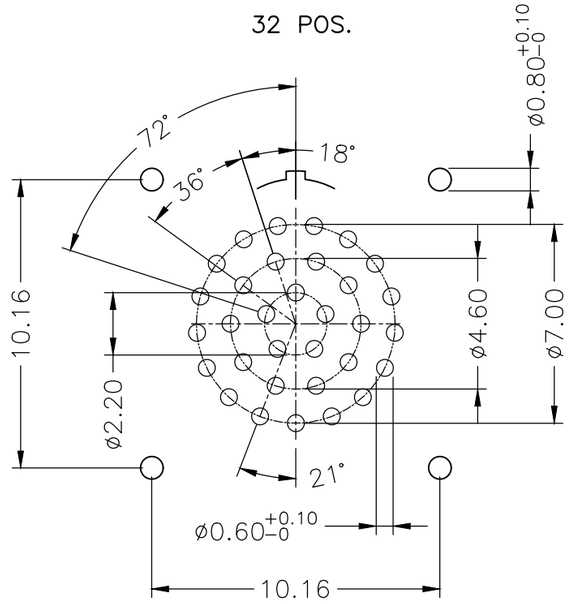


| | | | |
|---|---|---|---|
| THIRD ANGLE PROJECTION | | TOLERANCES UNLESS OTHERWISE SPECIFIED | |
| UNITS ■ mm □ INCH | | 0 PLC ± 1.00<br>1 PLC ± 0.50<br>2 PLC ± 0.25<br>3 PLC ±<br>4 PLC ± | |
| ANGLES 0 PLC ± 3<br>1 PLC ± 2 | | | |
| APPROVED BY | JACK | DATE | 2025-5-22 |
| CHECKED BY | CHARLES | DATE | 2025-5-22 |
| DRAWN BY | ANDY | DATE | 2025-5-22 |

Dongguan Circon Technology Co.,Ltd.

TITLE: 2B METAL CIRCULAR CONNECTOR FIXED SOCKET-PCB CONTACTS

| | | | |
|---|---|---|---|
| C | DRAWING NO. | A-M-660 | REV. A0 |
| | PART NO. | 2BAFMXXXXXX0C | |

| REV. | REVISION DESCRIPTION | ECR/ECN NO. | DATE |
|---|---|---|---|

SIZE: A3 | SCALE: 1:1 | SHEET: 5 OF 5