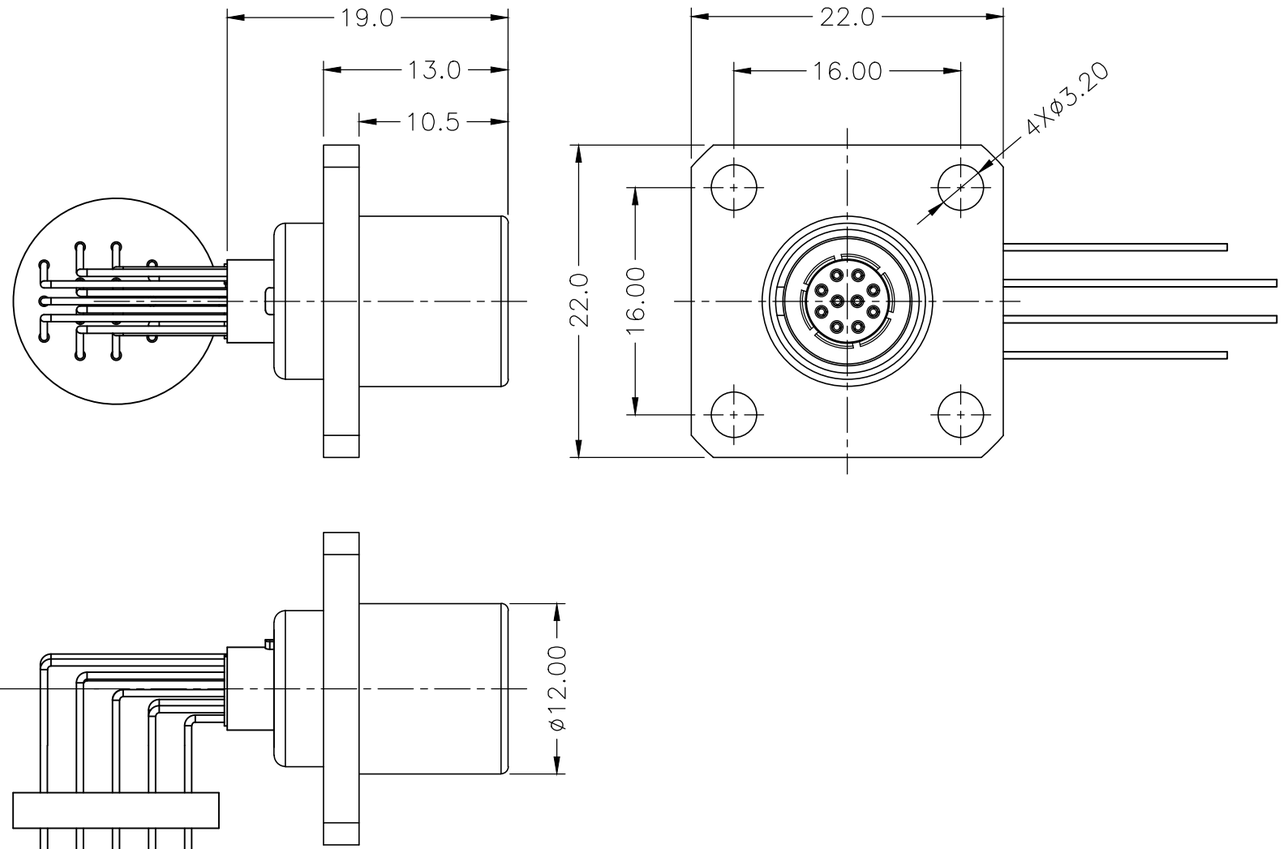

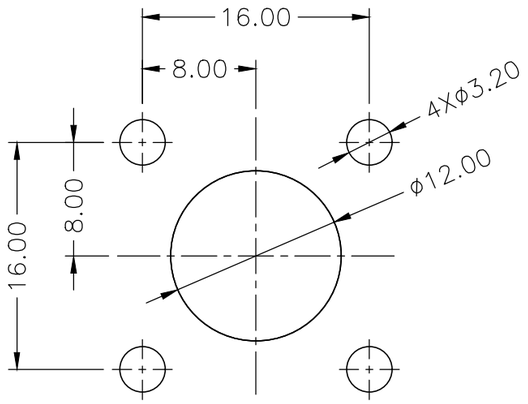

PANEL CUT-OUT

DIMENSIONAL TOLERANCE:±0.05

NOTE:

1. MATERIAL:

1.1.SHELL: COPPER ALLOY,Cr PLATING,

1.2.INSERT: THERMOPLASTIC,UL94V-0

1.3.CENTER CONTACT : COPPER ALLOY,Au PLATING

1.4.CENTER WIRE : COPPER ALLOY

1.5.SPACER : THERMOPLASTIC,NATURAL,UL94V-0

1.6.OTHER METALLIC COMPONENTS: COPPER ALLOY,Ni PLATING

2.NUMBER OF CONTACT : 2 TO 14 POSITION

3.RoHS DIRECTIVE COMPLIANCE

4.1B METAL CIRCULAR ASSEMBLY P/N DESCRIPTION :

1B A FN X X XX X 00C
① ② ③ ④

① Insert
P=PEEK
1=PPS

② Plating
2=High Gold
A=Gold flash

③ Number of contacts
02=2Pin
⋮
14=14Pin

④ Keying

G= 0°	E= 145°
A= 30°	F= 155°
B= 60°	J= 45°
C= 90°	K= 70°
D= 135°	L= 80°

THIRD ANGLE PROJECTION		TOLERANCES UNLESS OTHERWISE SPECIFIED	
UNITS ■ mm □ INCH		0 PLC ± 1.00 1 PLC ± 0.50 2 PLC ± 0.25 3 PLC ± 4 PLC ±	
ANGLES 0 PLC ± 3 1 PLC ± 2			
APPROVED BY	JACK	DATE	2025-7-11
CHECKED BY	CHARLES	DATE	2025-7-11
DRAWN BY	ANDY	DATE	2025-7-11

Dongguan Circon Technology Co.,Ltd.

TITLE: 1B METAL CIRCULAR CONNECTOR FLANGE FIXED 90° SOCKET

C	DRAWING NO.	A-M-680	REV. A0
	PART NO.	1BAFNXXXXX00C	

SIZE: A3 | SCALE: 1:1 | SHEET: 1 OF 4

REV.	REVISION DESCRIPTION	ECR/ECN NO.	DATE

KEYING ANGLES (RECEPTACLE FRONT VIEW):

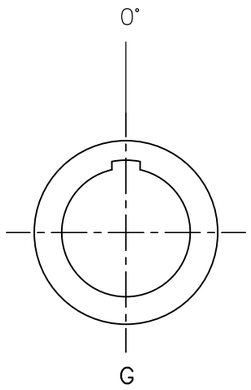

G

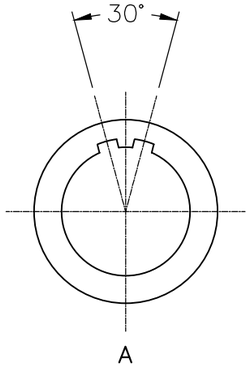

A

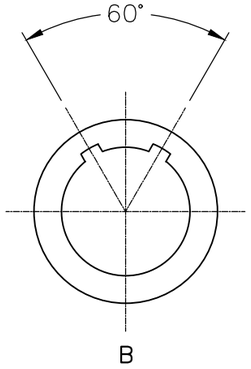

B

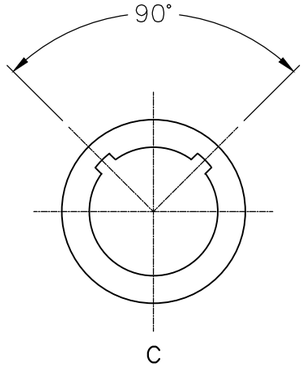

C

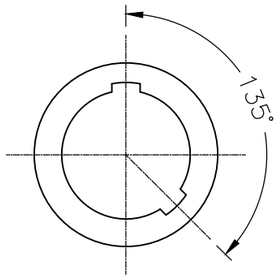

D

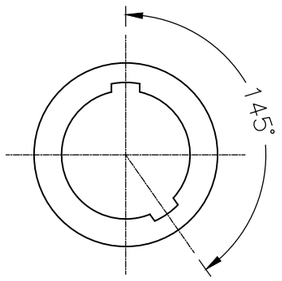

E

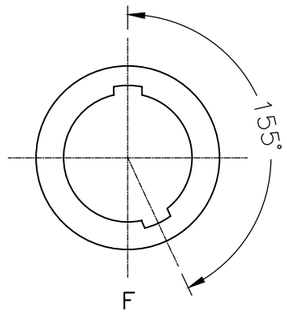

F

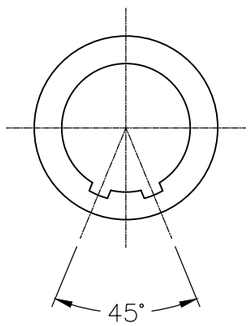

J

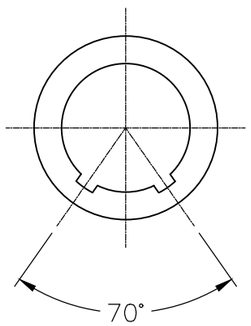

K

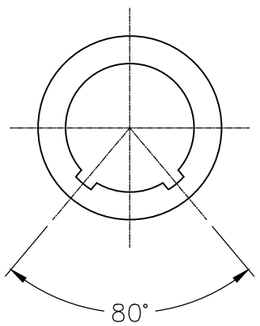

L

VIEW FROM TERMINATION SIDE PIN PART

02 PIN



03 PIN



04 PIN



05 PIN



06 PIN



07 PIN



08 PIN



10 PIN



14 PIN



THIRD ANGLE PROJECTION		TOLERANCES UNLESS OTHERWISE SPECIFIED	
UNITS ■ mm □ INCH		0 PLC ± 1.00 1 PLC ± 0.50 2 PLC ± 0.25 3 PLC ± 4 PLC ±	
ANGLES 0 PLC ± 3 1 PLC ± 2			
APPROVED BY	JACK	DATE	2025-7-11
CHECKED BY	CHARLES	DATE	2025-7-11
DRAWN BY	ANDY	DATE	2025-7-11

CIRCON®

Dongguan Circon Technology Co.,Ltd.

TITLE: 1B METAL CIRCULAR CONNECTOR FLANGE FIXED 90° SOCKET

C	DRAWING NO.	A-M-680	REV. A0
	PART NO.	1BAFNXXXXX00C	
SIZE: A3	SCALE: 1:1	SHEET: 2 OF 4	

REV.	REVISION DESCRIPTION	ECR/ECN NO.	DATE

PCB DRILLING PATTEN:

2 PIN

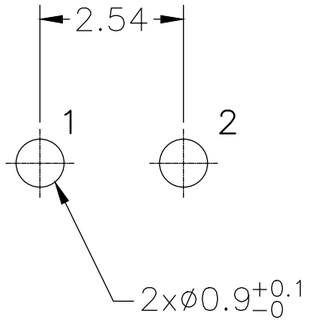

3 PIN

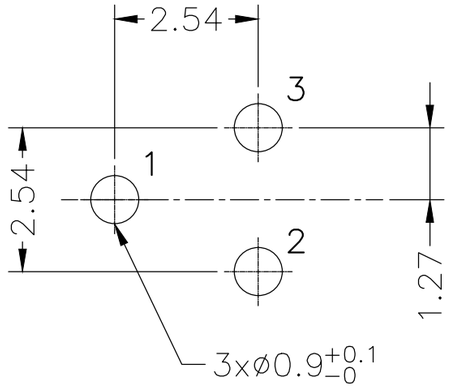

4 PIN

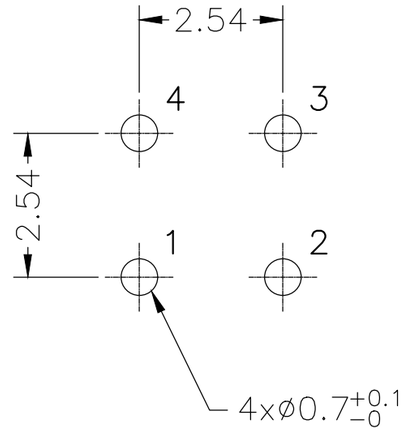

5 PIN

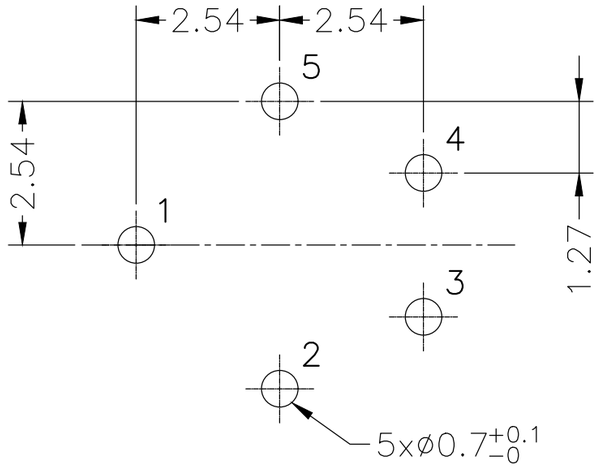

6 PIN

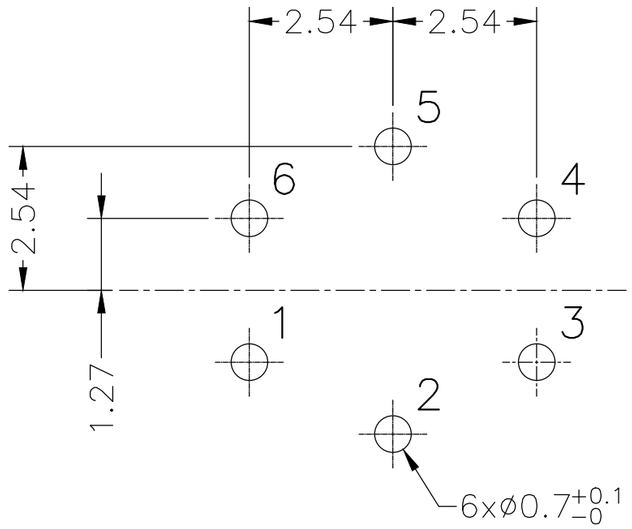

7 PIN

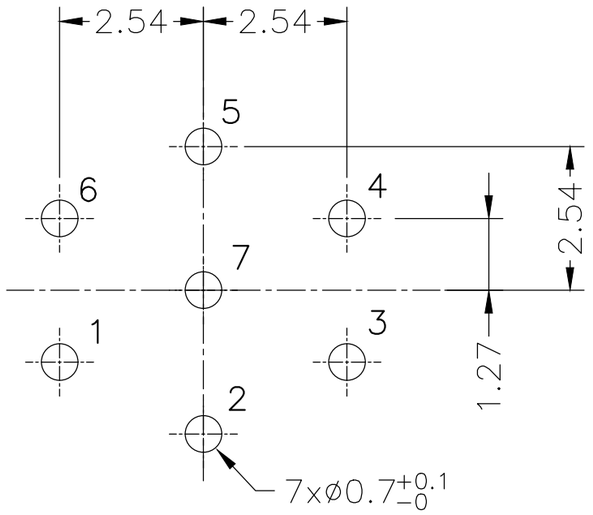

THIRD ANGLE PROJECTION		TOLERANCES UNLESS OTHERWISE SPECIFIED	
UNITS ■ mm □ INCH		0 PLC ± 1.00 1 PLC ± 0.50 2 PLC ± 0.25 3 PLC ± 4 PLC ±	
ANGLES 0 PLC ± 3 1 PLC ± 2			
APPROVED BY	JACK	DATE	2025-7-11
CHECKED BY	CHARLES	DATE	2025-7-11
DRAWN BY	ANDY	DATE	2025-7-11

Dongguan Circon Technology Co.,Ltd.

TITLE: 1B METAL CIRCULAR CONNECTOR FLANGE FIXED 90° SOCKET

C	DRAWING NO.	A-M-680	REV. A0
	PART NO.	1BAFNXXXXX00C	
SIZE: A3	SCALE: 1:1	SHEET: 3 OF 4	

REV.	REVISION DESCRIPTION	ECR/ECN NO.	DATE

PCB DRILLING PATTEN:

8 PIN

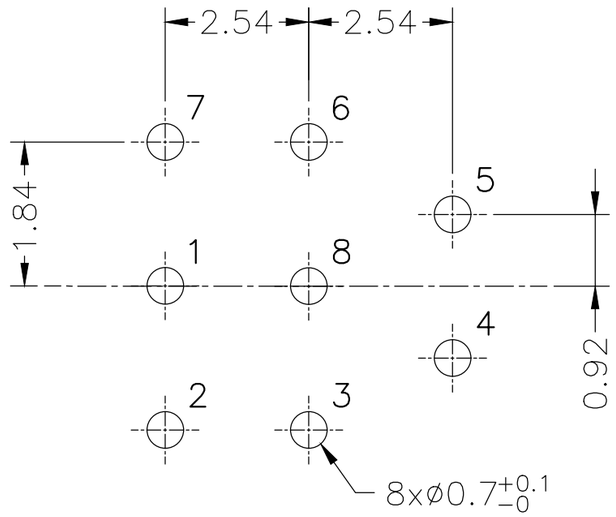

10 PIN

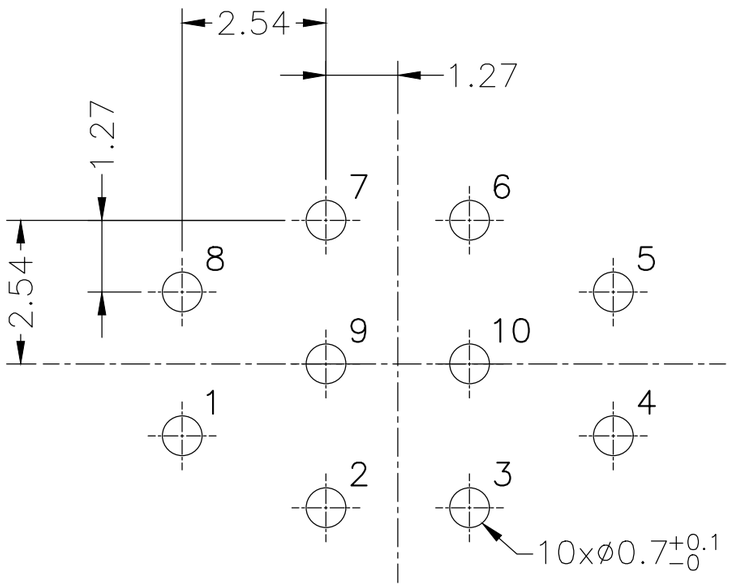

14 PIN

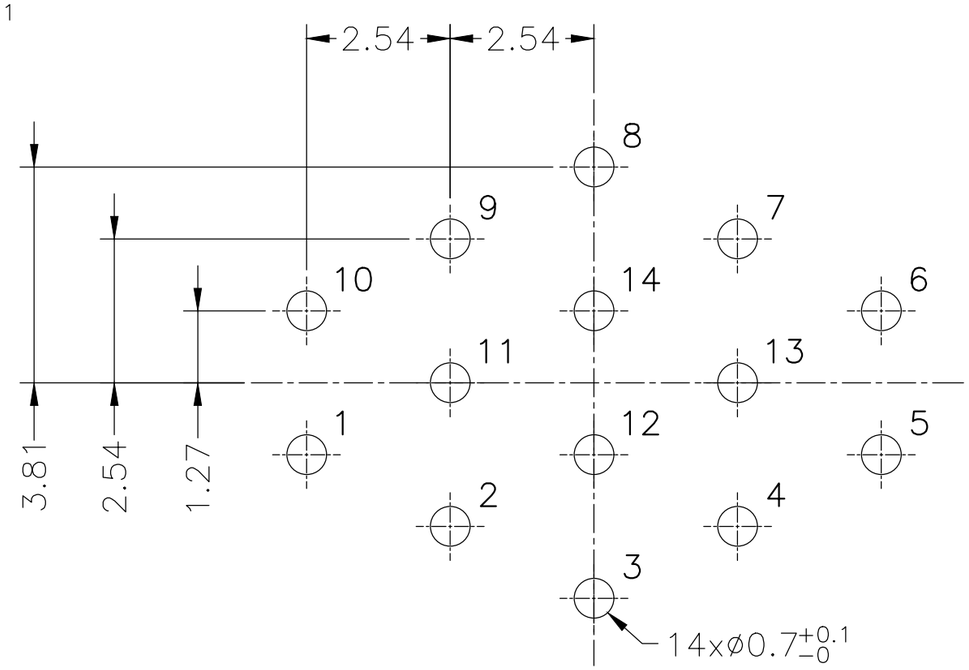

THIRD ANGLE PROJECTION		TOLERANCES UNLESS OTHERWISE SPECIFIED	0 PLC ± 1.00 1 PLC ± 0.50 2 PLC ± 0.25 3 PLC ± 4 PLC ±
UNITS ■ mm □ INCH			
ANGLES 0 PLC ± 3 1 PLC ± 2			

CIRCON®

Dongguan Circon Technology Co.,Ltd.

TITLE: 1B METAL CIRCULAR CONNECTOR FLANGE FIXED 90° SOCKET

APPROVED BY	JACK	DATE	2025-7-11	C	DRAWING NO. A-M-680
CHECKED BY	CHARLES	DATE	2025-7-11		PART NO. 1BAFNXXXXX00C
DRAWN BY	ANDY	DATE	2025-7-11	SIZE: A3	SCALE: 1:1

REV. A0

SHEET: 4 OF 4

REV.	REVISION DESCRIPTION	ECR/ECN NO.	DATE