00 METAL CIRCULAR ASSEMBLY

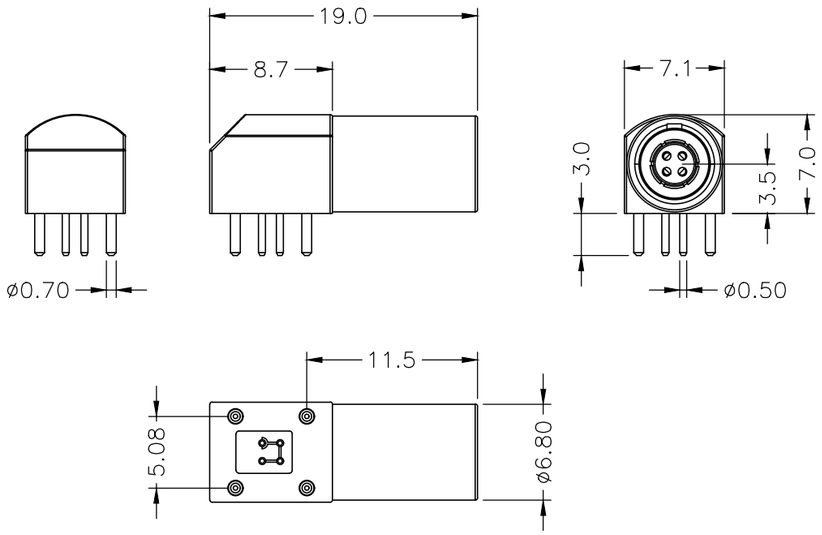

VIEW FROM TERMINATION SIDE PIN PART

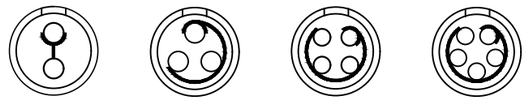

02 PIN　03 PIN　04 PIN　05 PIN

KEYING ANGLES (RECEPTACLE FRONT VIEW):

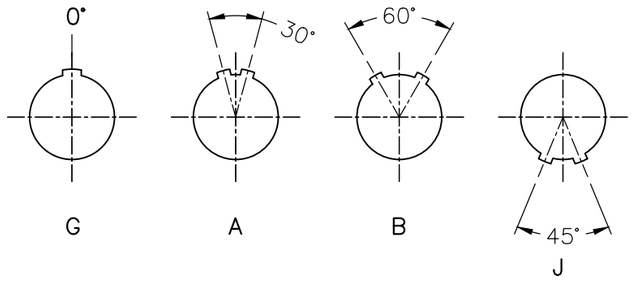

00 METAL CIRCULAR ASSEMBLY P/N DESCRIPTION :

00 A FV X X XX X 00C
① ② ③ ④

① Insert
P=PEEK
1=PPS

② Plating
2=High Gold
A=Gold flash

③ Number of contacts
02=2Pin
03=3Pin
04=4Pin
05=5Pin

④ Keying
G= 0°
A= 30°
B= 60°
J= 45°

PCB DRILLING PATTEN

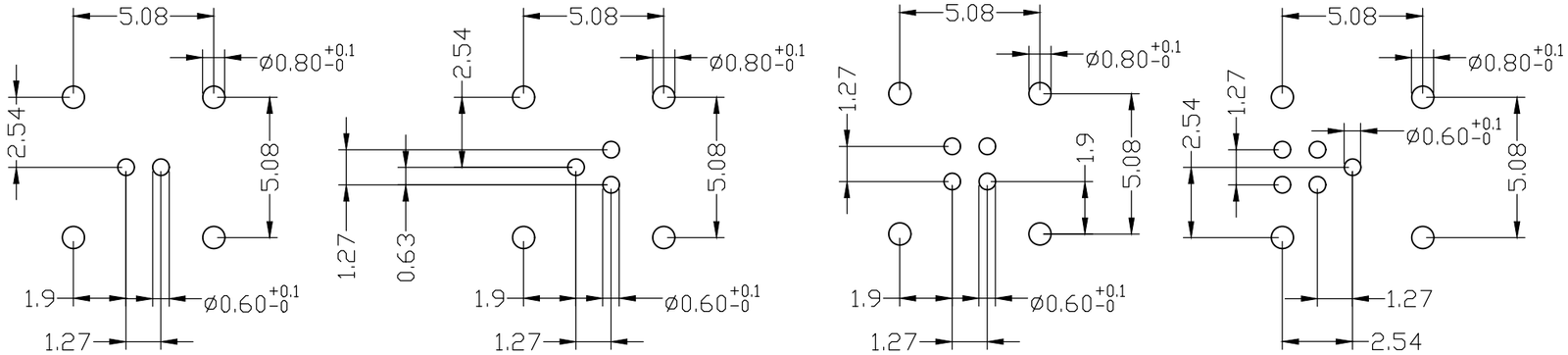

NOTE:

1. MATERIAL:

1.1.SHELL ASSEMBLY: COPPER ALLOY,OUTER SHELL Cr PLATING, OTHER METALLIC COMPONENTS Ni PLATING

1.2.INSERT: THERMOPLASTIC,UL94V–0

1.3.CENTER CONTACT : COPPER ALLOY,Au PLATING

2.NUMBER OF CONTACT : 2 TO 5 POSITION

3.RoHS DIRECTIVE COMPLIANCE

THIRD ANGLE PROJECTION		TOLERANCES UNLESS OTHERWISE SPECIFIED	
UNITS ■ mm □ INCH		0 PLC ± 1.00 1 PLC ± 0.50 2 PLC ± 0.25 3 PLC ± 4 PLC ±	
ANGLES 0 PLC ± 3° 1 PLC ± 2°			
APPROVED BY	JACK	DATE	2026–1–14
CHECKED BY	CHARLES	DATE	2026–1–14
DRAWN BY	ANDY	DATE	2026–1–14

Dongguan Circon Technology Co.,Ltd.

TITLE: 00 METAL CIRCULAR CONNECTOR ELBOW (90°) SOCKET

C	DRAWING NO.	A–M–758	REV. A0
	PART NO.	00AFVXXXXX00C	
SIZE: A3	SCALE: 1:1	SHEET: 1 OF 1	

REV.	REVISION DESCRIPTION	ECR/ECN NO.	DATE