

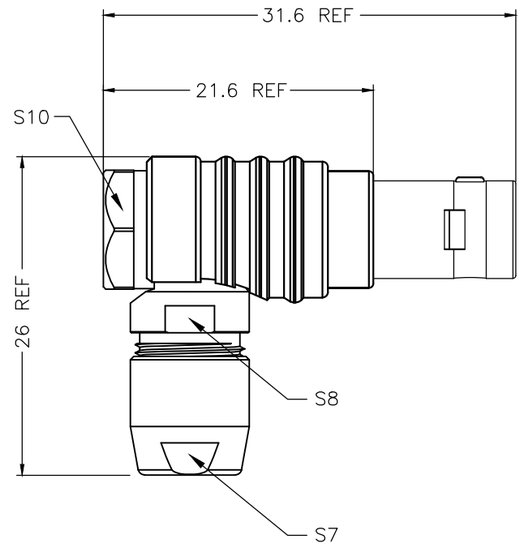

0B METAL CIRCULAR ASSEMBLY P/N DESCRIPTION :

0B A M3 X X XX X XX A
① ② ③ ④ ⑤

① Insert
P=PEEK
1=PPS

② Plating
2=High Gold
A=Gold flash

③ Number of contacts
02=2Pin
⋮
09=9Pin

④ Keying

G= 0°	D=135°	K= 70°
A= 30°	E=145°	L= 80°
B= 60°	F=155°	M=110°
C= 90°	J= 45°	

⑤ Cable collet
22=2.2mm (Cableø1.4~2.2mm)
32=3.2mm (Cableø2.2~3.2mm)
42=4.2mm (Cableø3.2~4.2mm)
52=5.2mm (Cableø4.2~5.2mm)
56=5.6mm (Cableø5.2~5.6mm)

NOTE:

1. MATERIAL:

1.1.SHELL ASSEMBLY: COPPER ALLOY,OUTER SHELL AND COLLET NUT Cr PLATING, OTHER METALLIC COMPONENTS Ni PLATING

1.2.INSERT: THERMOPLASTIC,UL94V-0

1.3.CENTER CONTACT : COPPER ALLOY,Au PLATING

2.NUMBER OF CONTACT : 2 TO 9 POSITION

3.RoHS DIRECTIVE COMPLIANCE

REV.	REVISION DESCRIPTION	ECR/ECN NO.	DATE

THIRD ANGLE PROJECTION		TOLERANCES UNLESS OTHERWISE SPECIFIED		Dongguan Circon Technology Co.,Ltd.	
UNITS ■ mm □ INCH		0 PLC ± 1.00 1 PLC ± 0.50 2 PLC ± 0.25 3 PLC ± 4 PLC ±		TITLE: 0B METAL CIRCULAR CONNECTOR 90° PLUGS	
ANGLES 0 PLC ± 3 1 PLC ± 2				C	DRAWING NO. A-M-153 / PART NO. 0BAM3XXXXXXXA / REV. A0
APPROVED BY	JACK	DATE	2020-3-28		
CHECKED BY	CHARLES	DATE	2020-3-28		
DRAWN BY	ANDY	DATE	2020-3-28	SIZE: A3	SCALE: 1:1 / SHEET: 1 OF 2

KEYING (PLUG FRONT VIEW):

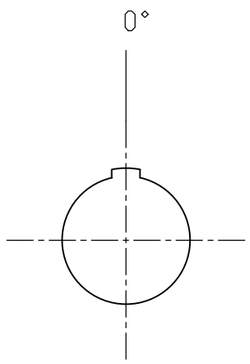

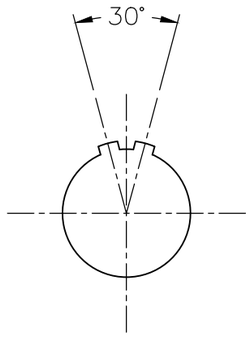

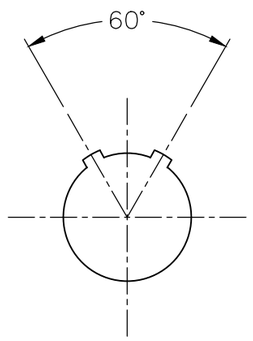

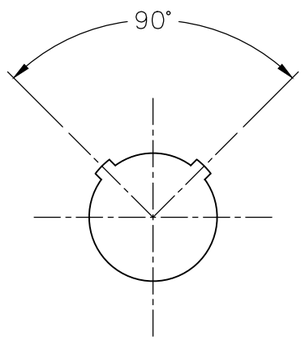

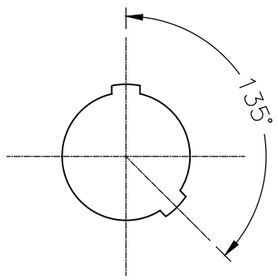

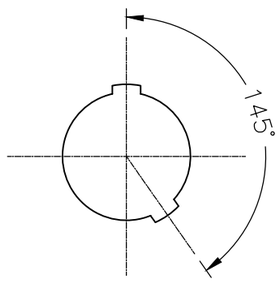

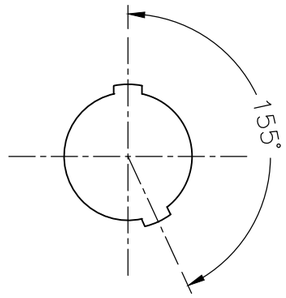

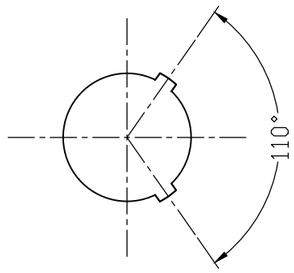

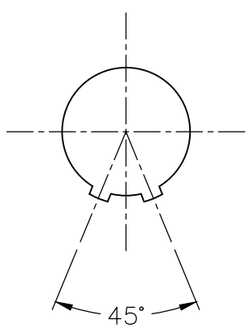

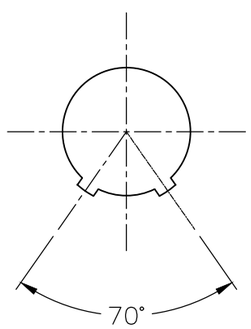

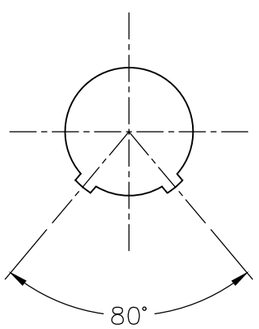

VIEW FROM TERMINATION SIDE PIN PART

02 PIN



03 PIN



04 PIN



05 PIN



06 PIN



07 PIN



9 PIN



THIRD ANGLE PROJECTION		TOLERANCES UNLESS OTHERWISE SPECIFIED	
UNITS ■ mm □ INCH		0 PLC ± 1.00 1 PLC ± 0.50 2 PLC ± 0.25 3 PLC ± 4 PLC ±	
ANGLES 0 PLC ± 3 1 PLC ± 2			
APPROVED BY	JACK	DATE	2020-3-28
CHECKED BY	CHARLES	DATE	2020-3-28
DRAWN BY	ANDY	DATE	2020-3-28

CIRCON®

Dongguan Circon Technology Co.,Ltd.

TITLE: 0B METAL CIRCULAR CONNECTOR 90° PLUGS

C	DRAWING NO.	A-M-153	REV. A0
	PART NO.	0BAM3XXXXXXXA	
SIZE: A3	SCALE: 1:1	SHEET: 2 OF 2	

REV.	REVISION DESCRIPTION	ECR/ECN NO.	DATE