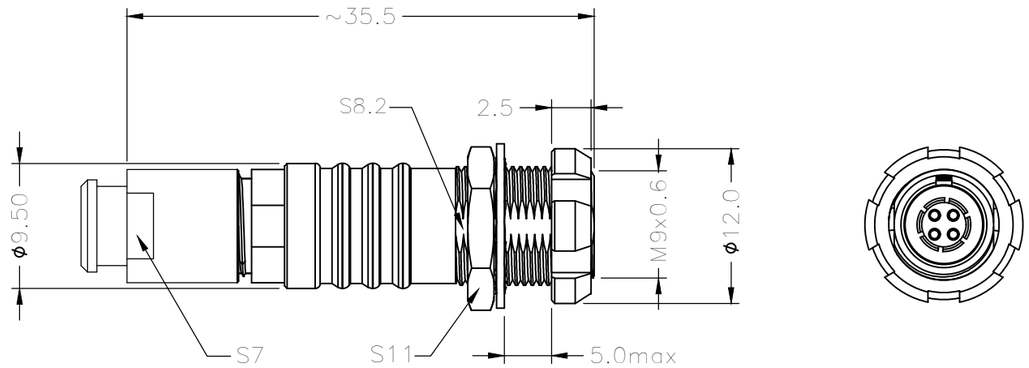

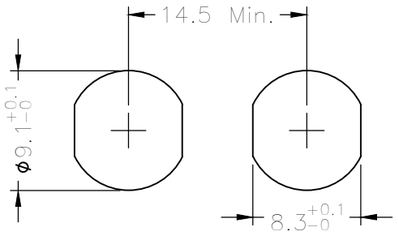

PANEL CUT-OUT

OB METAL CIRCULAR ASSEMBLY P/N DESCRIPTION :

OB A R1 X X XX X XX B
① ② ③ ④ ⑤

① Insert
P=PEEK
1=PPS

② Plating
2=High Gold
A=Gold flash

③ Number of contacts
02=2Pin
⋮
09=9Pin

④ Keying

G= 0°	D= 135°	K= 70°
A= 30°	E= 145°	L= 80°
B =60°	F= 155°	M=110°
C =90°	J= 45°	

⑤ Cable collet
22=2.2mm (Cableø1.4~2.2mm)
32=3.2mm (Cableø2.2~3.2mm)
42=4.2mm (Cableø3.2~4.2mm)
52=5.2mm (Cableø4.2~5.2mm)
56=5.6mm (Cableø5.2~5.6mm)

NOTE:

1. MATERIAL:

1.1.SHELL ASSEMBLY: COPPER ALLOY,OUTER SHELL AND COLLET NUT Cr PLATING, OTHER METALLIC COMPONENTS Ni PLATING

1.2.INSERT: THERMOPLASTIC,UL94V-0

1.3.CENTER CONTACT : COPPER ALLOY,Au PLATING

2.NUMBER OF CONTACT : 2 TO 9 POSITION

3.RoHS DIRECTIVE COMPLIANCE

THIRD ANGLE PROJECTION	TOLERANCES UNLESS OTHERWISE SPECIFIED		
UNITS ■ mm □ INCH	0 PLC ± 1.00 1 PLC ± 0.50 2 PLC ± 0.25 3 PLC ± 4 PLC ±		
ANGLES 0 PLC ± 3 1 PLC ± 2			
APPROVED BY	JACK	DATE	2021-6-19
CHECKED BY	CHARLES	DATE	2021-6-19
DRAWN BY	ANDY	DATE	2021-6-19

CIRCON®
Dongguan Circon Technology Co.,Ltd.

TITLE: OB METAL CIRCULAR CONNECTOR FIXED SOCKET

C	DRAWING NO.	A-M-236	REV. A0
	PART NO.	0BAR1XXXXXXXB	
SIZE: A3	SCALE: 1:1	SHEET: 1 OF 2	

REV.	REVISION DESCRIPTION	ECR/ECN NO.	DATE

KEYING ANGLES (RECEPTACLE FRONT VIEW):

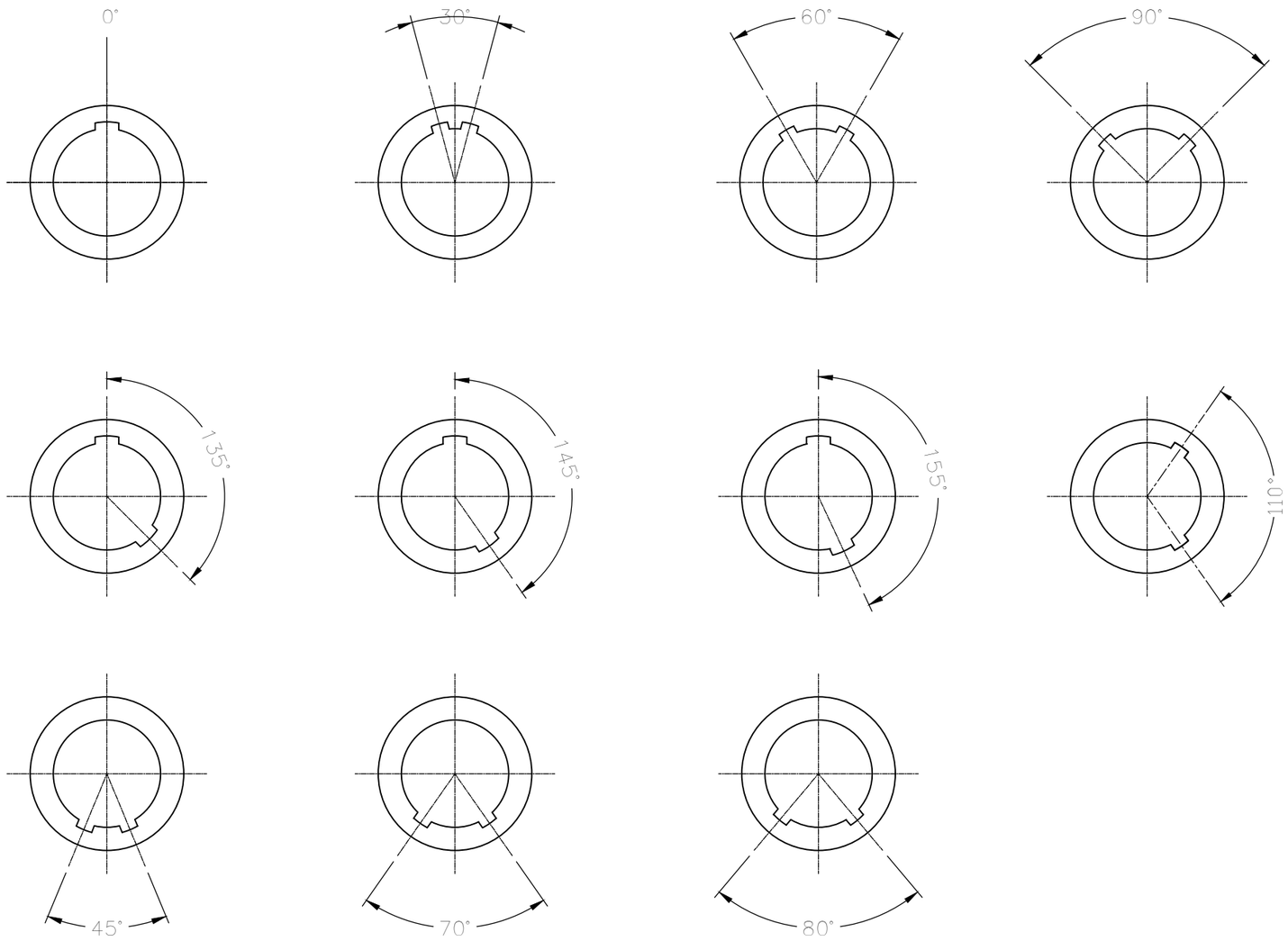

VIEW FROM TERMINATION SIDE PIN PART

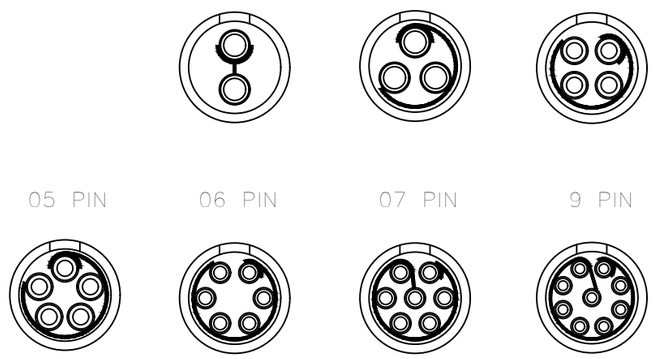

THIRD ANGLE PROJECTION	TOLERANCES UNLESS OTHERWISE SPECIFIED		
UNITS ■ mm □ INCH	0 PLC ± 1.00 1 PLC ± 0.50 2 PLC ± 0.25 3 PLC ± 4 PLC ±		
ANGLES 0 PLC ± 3 1 PLC ± 2			
APPROVED BY	JACK	DATE	2021-6-19
CHECKED BY	CHARLES	DATE	2021-6-19
DRAWN BY	ANDY	DATE	2021-6-19

CIRCON®

Dongguan Circon Technology Co.,Ltd.

TITLE: 0B METAL CIRCULAR CONNECTOR FIXED SOCKET

C	DRAWING NO.	A-M-236	REV.
	PART NO.	0BAR1XXXXXXXB	A0
SIZE: A3	SCALE: 1:1	SHEET: 2 OF 2	

REV.	REVISION DESCRIPTION	ECR/ECN NO.	DATE