

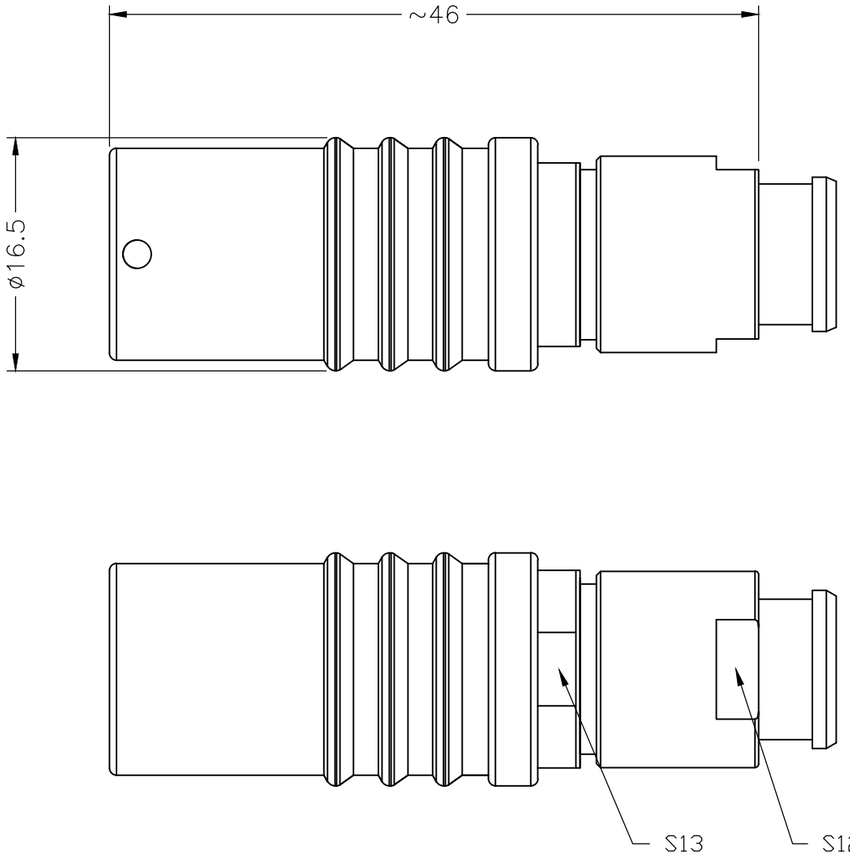

2B METAL CIRCULAR ASSEMBLY P/N DESCRIPTION :

2B A S1 X X XX X XX B
① ② ③ ④ ⑤

① Insert
P=PEEK
1=PPS

② Plating
2=High Gold
A=Gold flash

③ Number of contacts
02=2Pin
⋮
32=32Pin

④ Keying

G= 0°	E= 120°
A= 30°	F= 145°
B= 45°	J= 37.5°
C= 60°	K= 52.5°
D= 95°	L= 70°

⑤ Cable collet
22=2.2mm (Cableø1.4~2.2mm)
32=3.2mm (Cableø2.2~3.2mm)
42=4.2mm (Cableø3.2~4.2mm)
52=5.2mm (Cableø4.2~5.2mm)
62=6.2mm (Cableø5.2~6.2mm)
72=7.2mm (Cableø6.2~7.2mm)
82=8.2mm (Cableø7.2~8.2mm)
92=9.2mm (Cableø8.2~9.2mm)

NOTE:

1. MATERIAL:

1.1.SHELL ASSEMBLY: COPPER ALLOY,OUTER SHELL AND COLLET NUT Cr PLATING, OTHER METALLIC COMPONENTS Ni PLATING

1.2.INSERT: THERMOPLASTIC,UL94V-0

1.3.CENTER CONTACT : COPPER ALLOY,Au PLATING

2.NUMBER OF CONTACT : 2 TO 32 POSITION

3.RoHS DIRECTIVE COMPLIANCE

THIRD ANGLE PROJECTION	TOLERANCES UNLESS OTHERWISE SPECIFIED	CIRCON® Dongguan Circon Technology Co.,Ltd.					
UNITS ■ mm □ INCH	0 PLC ± 1.00 1 PLC ± 0.50 2 PLC ± 0.25 3 PLC ± 4 PLC ±	TITLE: 2B METAL CIRCULAR CONNECTOR FLOATING SOCKET					
ANGLES 0 PLC ± 3 1 PLC ± 2							
APPROVED BY	JACK	DATE	2026-1-23	C	DRAWING NO.	A-M-268	REV. A0
CHECKED BY	CHARLES	DATE	2026-1-23		PART NO.	2BAS1XXXXXXXB	
DRAWN BY	ANDY	DATE	2026-1-23	SIZE: A3	SCALE: 1:1	SHEET: 1 OF 3	

REV.	REVISION DESCRIPTION	ECR/ECN NO.	DATE

KEYING ANGLES (RECEPTACLE FRONT VIEW):

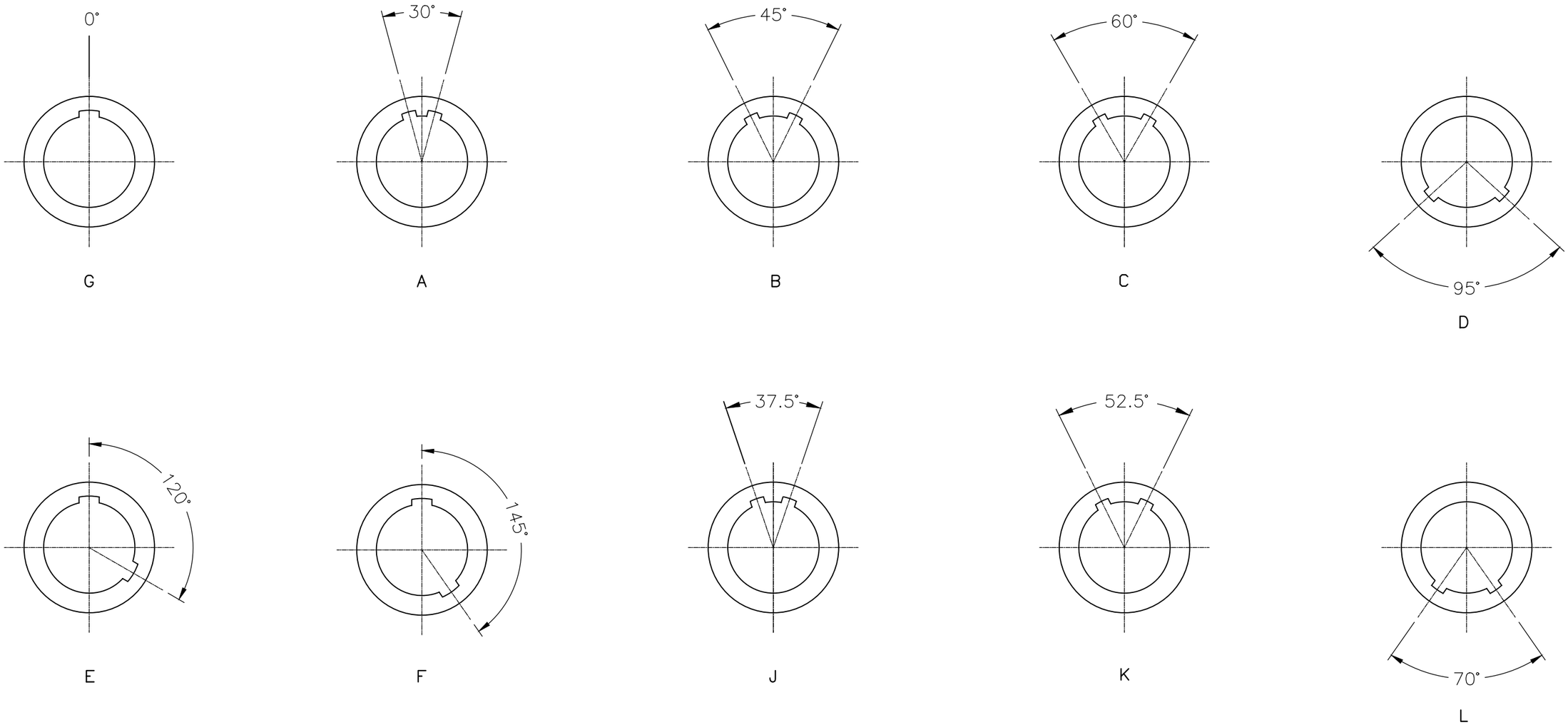

THIRD ANGLE PROJECTION	TOLERANCES UNLESS OTHERWISE SPECIFIED		
UNITS ■ mm □ INCH	0 PLC ± 1.00 1 PLC ± 0.50 2 PLC ± 0.25 3 PLC ± 4 PLC ±		
ANGLES 0 PLC ± 3 1 PLC ± 2			

CIRCON®

Dongguan Circon Technology Co.,Ltd.

TITLE: 2B METAL CIRCULAR CONNECTOR FLOATING SOCKET

APPROVED BY	JACK	DATE	2026-1-23
CHECKED BY	CHARLES	DATE	2026-1-23
DRAWN BY	ANDY	DATE	2026-1-23

C	DRAWING NO.	A-M-268	REV. A0
	PART NO.	2BAS1XXXXXXXB	
SIZE: A3	SCALE: 1:1	SHEET: 2 OF 3	

REV.	REVISION DESCRIPTION	ECR/ECN NO.	DATE

VIEW FROM TERMINATION SIDE PIN PART

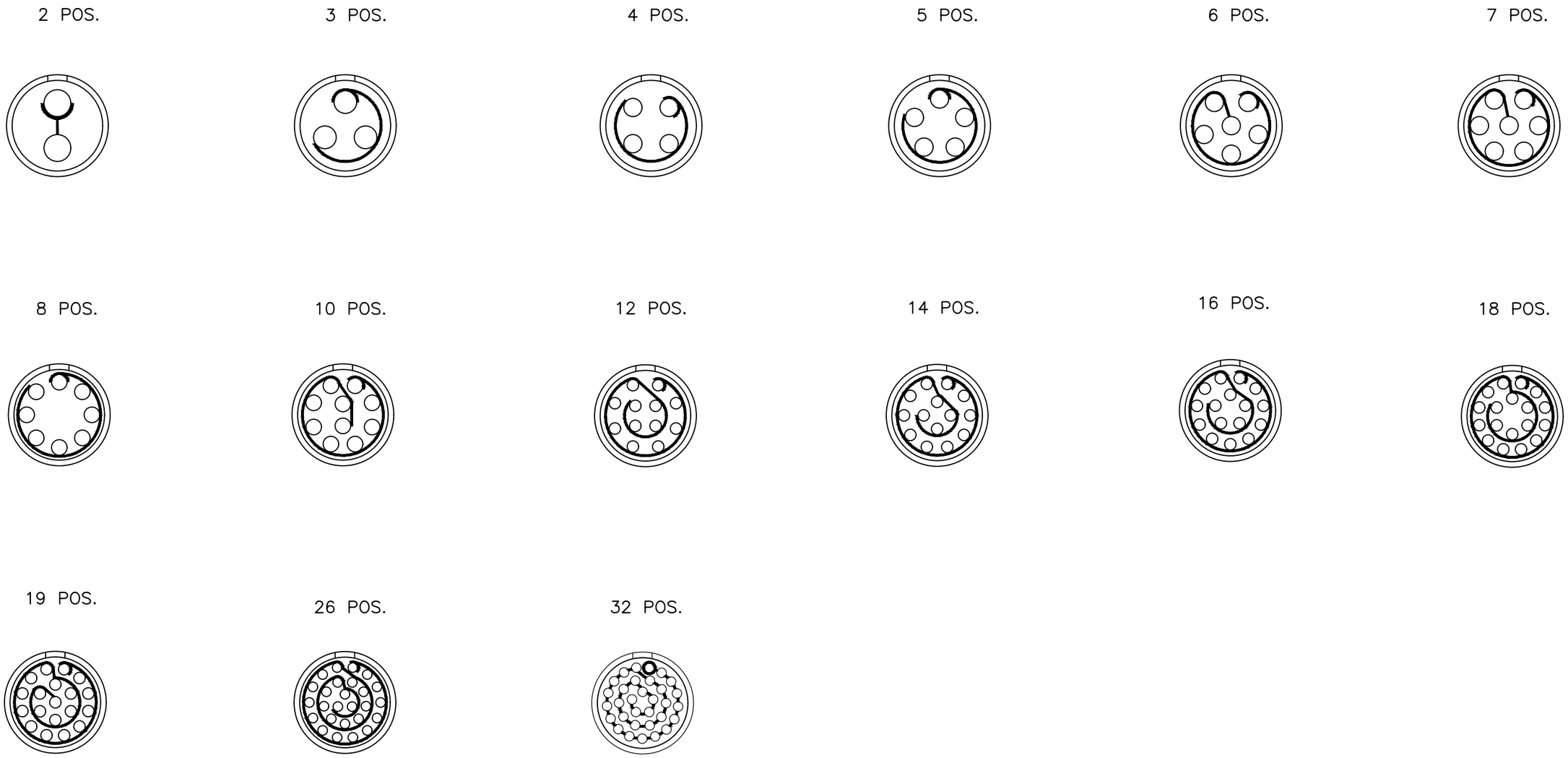

THIRD ANGLE PROJECTION		TOLERANCES UNLESS OTHERWISE SPECIFIED		CIRCON® Dongguan Circon Technology Co.,Ltd.			
UNITS ■ mm □ INCH		0 PLC ± 1.00 1 PLC ± 0.50 2 PLC ± 0.25 3 PLC ± 4 PLC ±		TITLE: 2B METAL CIRCULAR CONNECTOR FLOATING SOCKET			
ANGLES 0 PLC ± 3 1 PLC ± 2							
APPROVED BY	JACK	DATE	2026-1-23	C	DRAWING NO.	A-M-268	REV.
CHECKED BY	CHARLES	DATE	2026-1-23		PART NO.	2BAS1XXXXXXXB	
DRAWN BY	ANDY	DATE	2026-1-23	SIZE: A3	SCALE: 1:1	SHEET: 3 OF 3	

REV.	REVISION DESCRIPTION	ECR/ECN NO.	DATE