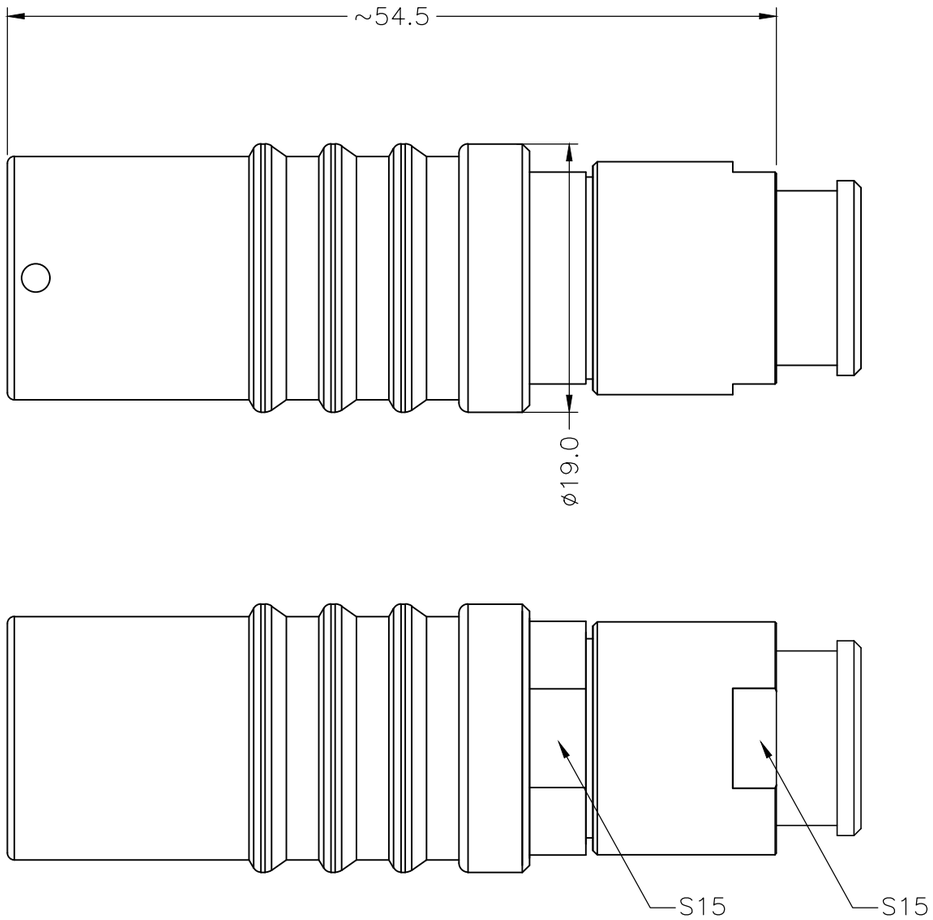

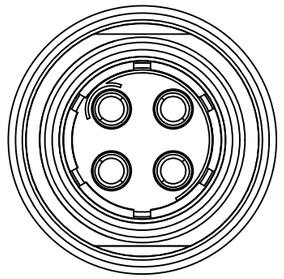

3B METAL CIRCULAR ASSEMBLY P/N DESCRIPTION :

3B A S1 X X XX X XX B
① ② ③ ④ ⑤

① Insert
P=PEEK
1=PPS

② Plating
2=High Gold
A=Gold flash

③ Number of contacts
02=2Pin
⋮
32=32Pin

④ Keying

G= 0°	E= 120°
A= 30°	F= 145°
B= 45°	J= 37.5°
C= 60°	K= 52.5°
D= 95°	L= 70°

⑤ Cable collet

62=6.2mm (Cableø4.9~6.2mm)
77=7.7mm (Cableø6.2~7.7mm)
92=9.2mm (Cableø7.7~9.2mm)
10=10.2mm (Cableø9.2~10.0mm)
11=11.0mm (Cableø10.1~11.0mm)

NOTE:

1. MATERIAL:

1.1.SHELL ASSEMBLY: COPPER ALLOY,OUTER SHELL AND COLLET NUT Cr PLATING, OTHER METALLIC COMPONENTS Ni PLATING

1.2.INSERT: THERMOPLASTIC,UL94V-0

1.3.CENTER CONTACT : COPPER ALLOY,Au PLATING

2.NUMBER OF CONTACT : 2 TO 32 POSITION

3.RoHS DIRECTIVE COMPLIANCE

REV.	REVISION DESCRIPTION	ECR/ECN NO.	DATE

THIRD ANGLE PROJECTION	TOLERANCES UNLESS OTHERWISE SPECIFIED		
UNITS ■ mm □ INCH	0 PLC ± 1.00 1 PLC ± 0.50 2 PLC ± 0.25 3 PLC ± 4 PLC ±		
ANGLES 0 PLC ± 3 1 PLC ± 2			
APPROVED BY	JACK	DATE	2025-7-7
CHECKED BY	CHARLES	DATE	2025-7-7
DRAWN BY	ANDY	DATE	2025-7-7

CIRCON®
Dongguan Circon Technology Co.,Ltd.

TITLE: 3B METAL CIRCULAR CONNECTOR FLOATING SOCKET

C	DRAWING NO.	A-M-679	REV. A0
	PART NO.	3BAS1XXXXXXXB	
SIZE: A3	SCALE: 1:1	SHEET: 1 OF 3	

KEYING ANGLES (RECEPTACLE FRONT VIEW):

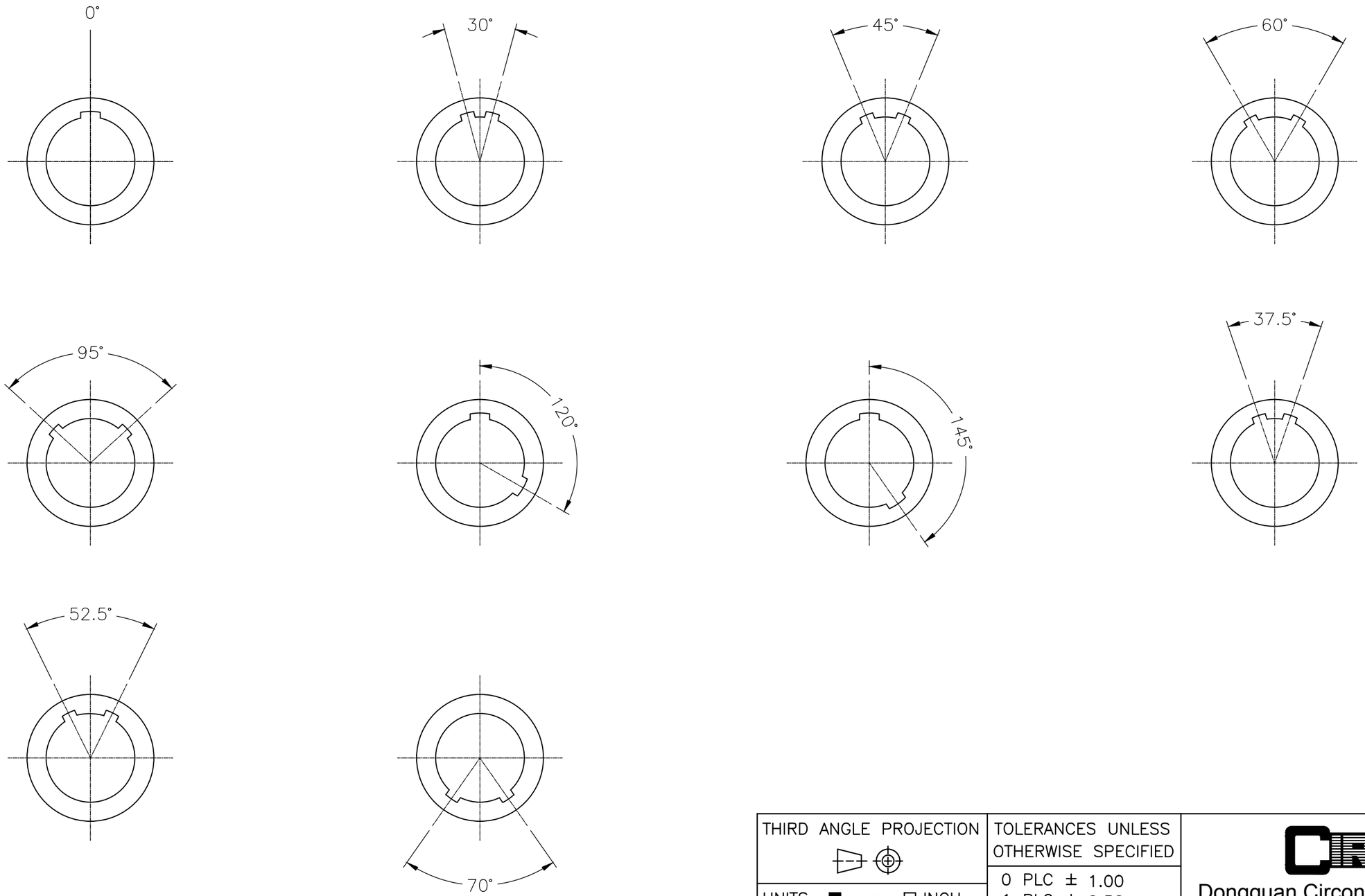

THIRD ANGLE PROJECTION		TOLERANCES UNLESS OTHERWISE SPECIFIED		CIRCON® Dongguan Circon Technology Co.,Ltd.			
UNITS ■ mm □ INCH		0 PLC ± 1.00 1 PLC ± 0.50 2 PLC ± 0.25 3 PLC ± 4 PLC ±		TITLE: 3B METAL CIRCULAR CONNECTOR FLOATING SOCKET			
ANGLES 0 PLC ± 3 1 PLC ± 2							
APPROVED BY	JACK	DATE	2025-7-7	C	DRAWING NO.	A-M-679	REV. A0
CHECKED BY	CHARLES	DATE	2025-7-7		PART NO.	3BAS1XXXXXXXB	
DRAWN BY	ANDY	DATE	2025-7-7	SIZE: A3	SCALE: 1:1	SHEET: 2 OF 3	

REV.	REVISION DESCRIPTION	ECR/ECN NO.	DATE

VIEW FROM TERMINATION SIDE PIN PART

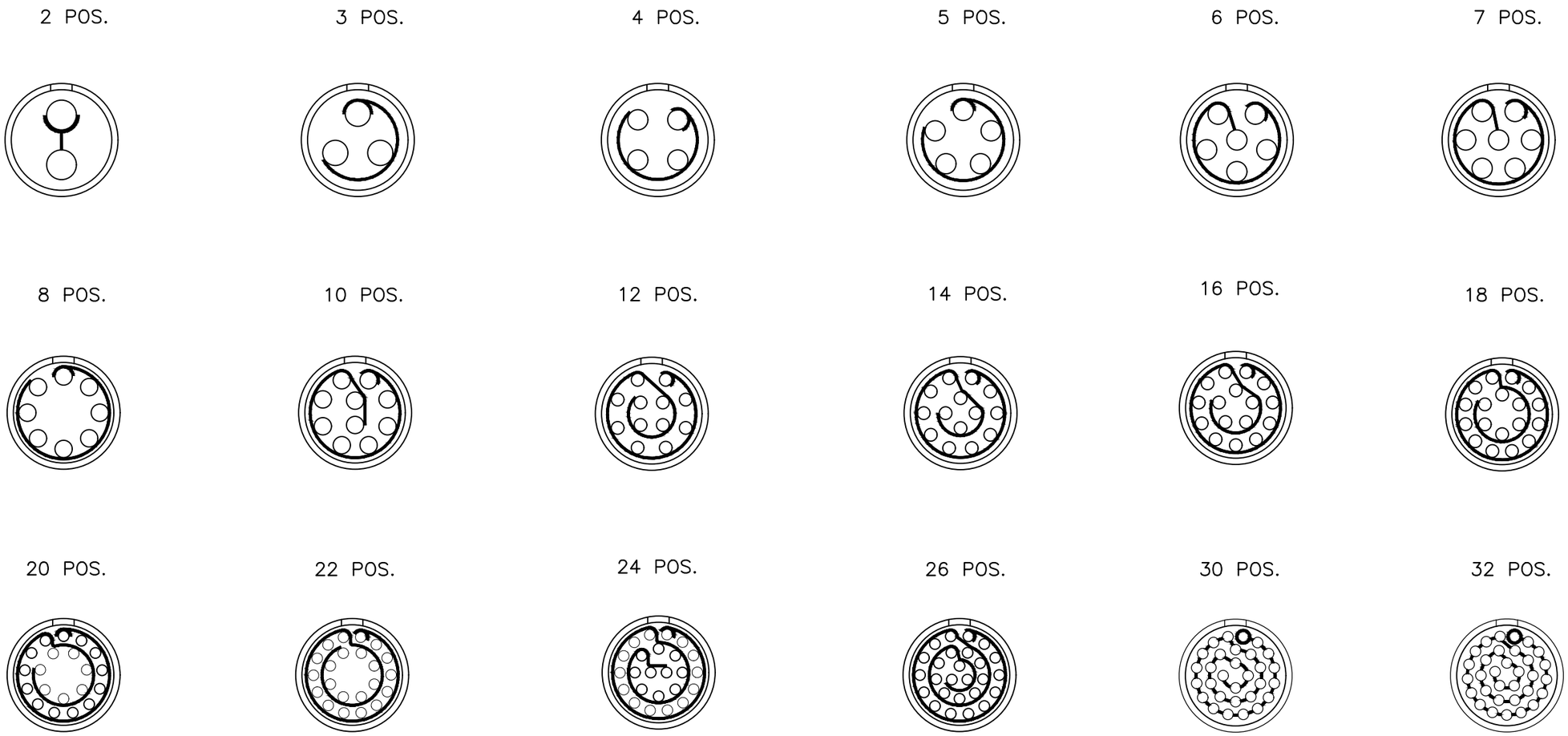

THIRD ANGLE PROJECTION		TOLERANCES UNLESS OTHERWISE SPECIFIED		CIRCON® Dongguan Circon Technology Co.,Ltd.			
UNITS ■ mm □ INCH		0 PLC ± 1.00 1 PLC ± 0.50 2 PLC ± 0.25 3 PLC ± 4 PLC ±		TITLE: 3B METAL CIRCULAR CONNECTOR FLOATING SOCKET			
ANGLES 0 PLC ± 3 1 PLC ± 2							
APPROVED BY	JACK	DATE	2025-7-7	C	DRAWING NO.	A-M-679	REV. A0
CHECKED BY	CHARLES	DATE	2025-7-7		PART NO.	3BAS1XXXXXXXB	
DRAWN BY	ANDY	DATE	2025-7-7	SIZE: A3	SCALE: 1:1	SHEET: 3 OF 3	

REV.	REVISION DESCRIPTION	ECR/ECN NO.	DATE