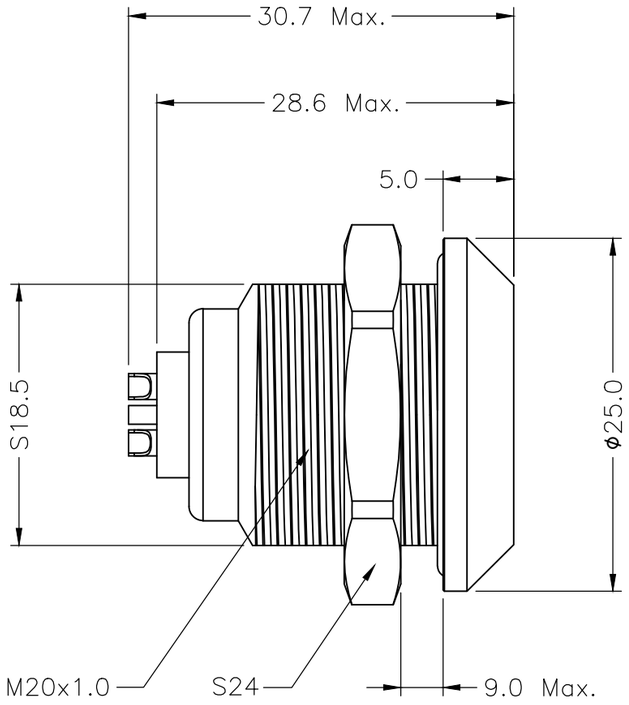

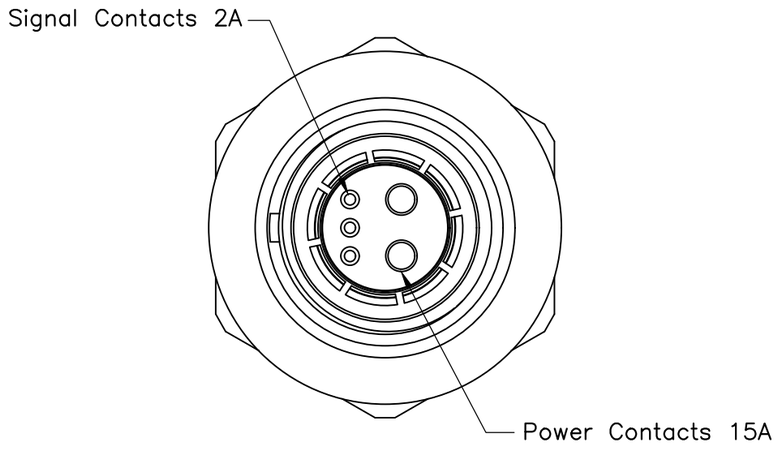

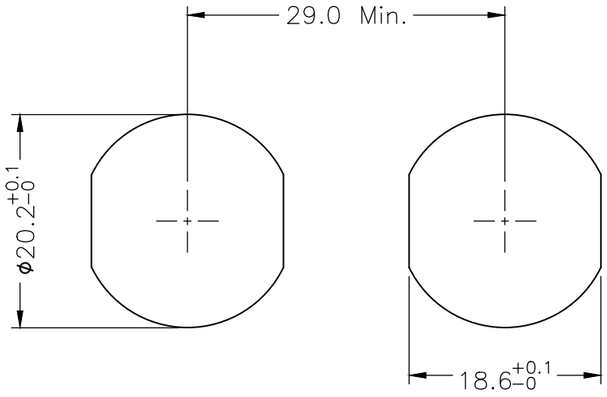

PANEL CUT-OUT

NOTE:

1. MATERIAL:

1.1.SHELL ASSEMBLY: COPPER ALLOY,OUTER SHELL Cr PLATING, OTHER METALLIC COMPONENTS Ni PLATING

1.2.INSERT: THERMOPLASTIC,UL94V-0

1.3.CENTER CONTACT : COPPER ALLOY,Au PLATING

1.4.O-RING : ELASTOMER

2.NUMBER OF CONTACT : 5 POSITION

3.RoHS DIRECTIVE COMPLIANCE

REV.	REVISION DESCRIPTION	ECR/ECN NO.	DATE

THIRD ANGLE PROJECTION		TOLERANCES UNLESS OTHERWISE SPECIFIED	
UNITS ■ mm □ INCH		0 PLC ± 1.00 1 PLC ± 0.50 2 PLC ± 0.25 3 PLC ± 4 PLC ±	
ANGLES 0 PLC ± 3 1 PLC ± 2			
APPROVED BY	JACK	DATE	2020-10-19
CHECKED BY	CHARLES	DATE	2020-10-19
DRAWN BY	ANDY	DATE	2020-10-19

Dongguan Circon Technology Co.,Ltd.

TITLE: 2K METAL CIRCULAR CONNECTOR FIXED SOCKETS

C	DRAWING NO.	A-M-***	REV. A0
	PART NO.	2KAF21AA5000C	
SIZE: A3	SCALE: 1:1	SHEET: 1 OF 1	