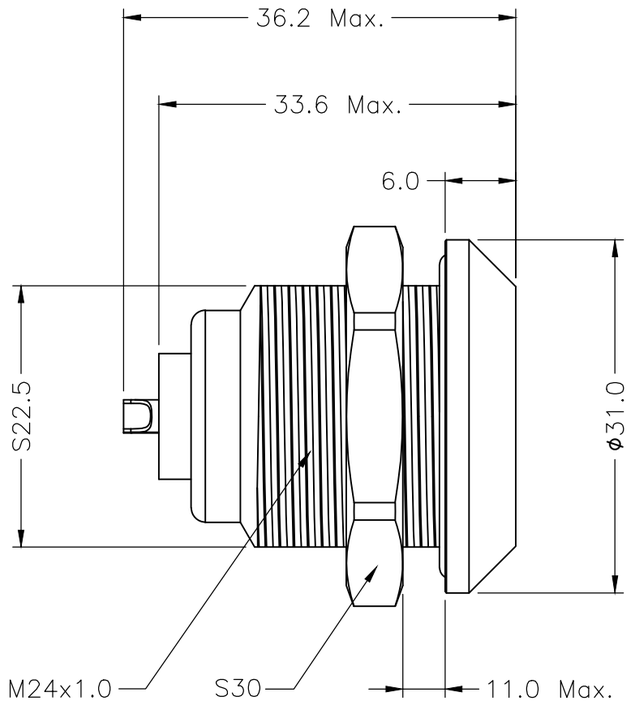

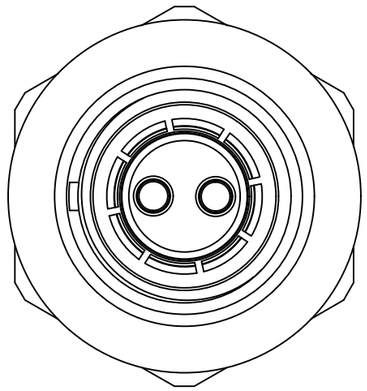

3K METAL CIRCULAR ASSEMBLY P/N DESCRIPTION :

3K A F2 X X XX X 00 C
① ② ③ ④

① Insert
P=PEEK
1=PPS

② Plating
2=High Gold
A=Gold flash

③ Number of contacts
02=2Pin
⋮
32=32Pin

④ Keying

G= 0°	D= 95°
A= 30°	E=120°
B= 45°	F=145°
C= 60°	L= 75°

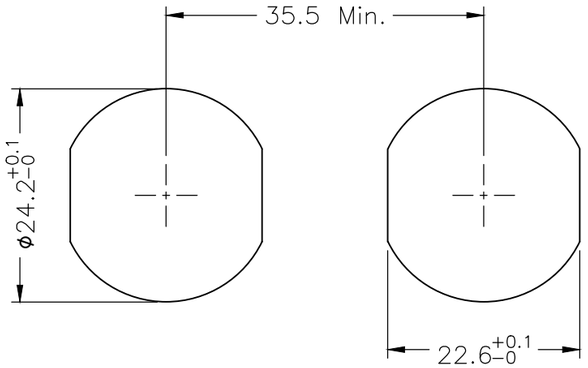

PANEL CUT–OUT

NOTE:

1. MATERIAL:

1.1.SHELL ASSEMBLY: COPPER ALLOY,OUTER SHELL Cr PLATING, OTHER METALLIC COMPONENTS Ni PLATING

1.2.INSERT: THERMOPLASTIC,UL94V–0

1.3.CENTER CONTACT : COPPER ALLOY,Au PLATING

1.4.O–RING : ELASTOMER

2.NUMBER OF CONTACT : 2 TO 32 POSITION

3.RoHS DIRECTIVE COMPLIANCE

REV.	REVISION DESCRIPTION	ECR/ECN NO.	DATE

THIRD ANGLE PROJECTION		TOLERANCES UNLESS OTHERWISE SPECIFIED	
UNITS ■ mm □ INCH		0 PLC ± 1.00 1 PLC ± 0.50 2 PLC ± 0.25 3 PLC ± 4 PLC ±	
ANGLES 0 PLC ± 3 1 PLC ± 2			
APPROVED BY	JACK	DATE	2021–8–5
CHECKED BY	CHARLES	DATE	2021–8–5
DRAWN BY	ANDY	DATE	2021–8–5

CIRCON®
Dongguan Circon Technology Co.,Ltd.

TITLE: 3K METAL CIRCULAR CONNECTOR FIXED SOCKETS

C	DRAWING NO.	A–M–248	REV. A0
	PART NO.	3KAF2P2XXX00C	
SIZE: A3	SCALE: 1:1	SHEET: 1 OF 3	

KEYING ANGLES (RECEPTACLE FRONT VIEW):

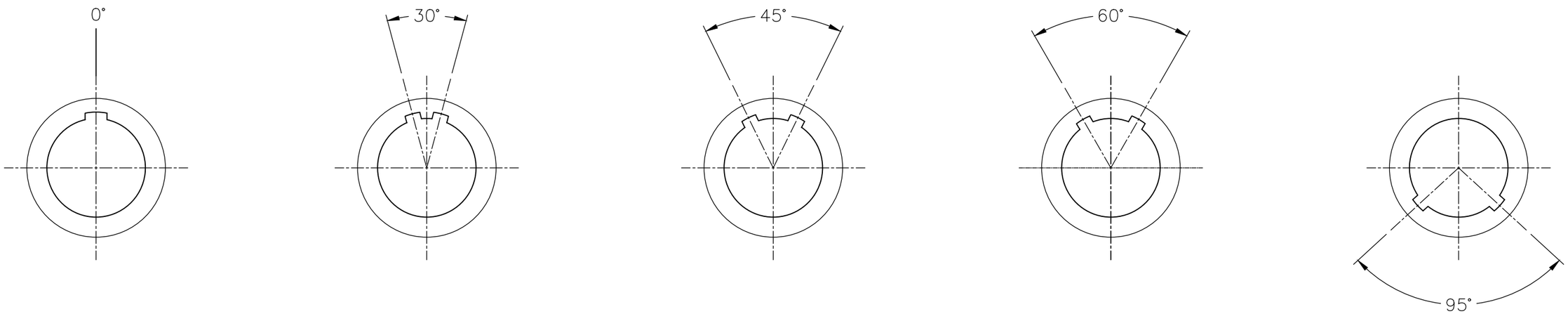

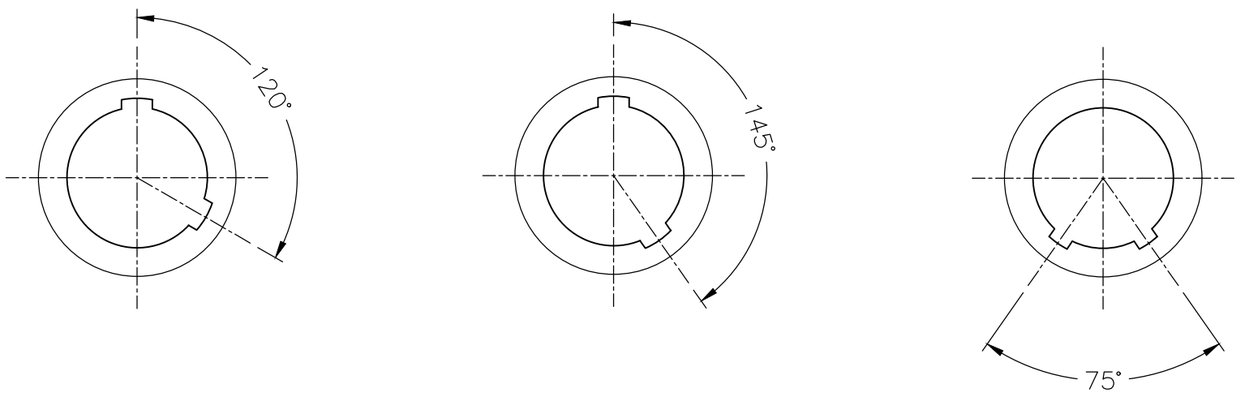

THIRD ANGLE PROJECTION		TOLERANCES UNLESS OTHERWISE SPECIFIED	0 PLC ± 1.00 1 PLC ± 0.50 2 PLC ± 0.25 3 PLC ± 4 PLC ±
UNITS ■ mm □ INCH			
ANGLES 0 PLC ± 3 1 PLC ± 2			

Dongguan Circon Technology Co.,Ltd.

TITLE: 3K METAL CIRCULAR CONNECTOR FIXED SOCKETS

APPROVED BY	JACK	DATE	2021-8-5	C	DRAWING NO. A-M-248 REV. A0
CHECKED BY	CHARLES	DATE	2021-8-5		PART NO. 3KAF2P2XXX00C
DRAWN BY	ANDY	DATE	2021-8-5	SIZE: A3	SCALE: 1:1 SHEET: 2 OF 3

REV.	REVISION DESCRIPTION	ECR/ECN NO.	DATE

VIEW FROM TERMINATION SIDE PIN PART

2 POS.

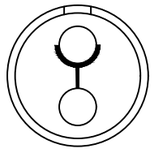

3 POS.



4 POS.

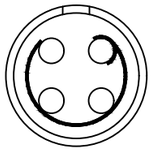

5 POS.

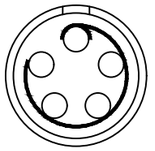

6 POS.

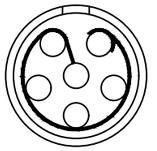

7 POS.

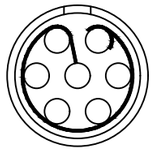

8 POS.

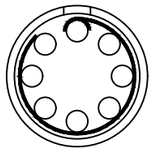

10 POS.



12 POS.

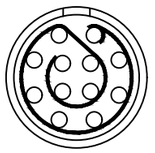

14 POS.



16 POS.

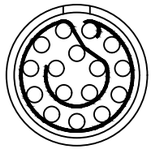

18 POS.

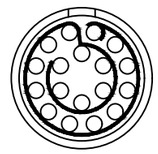

20 POS.

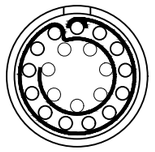

22 POS.



24 POS.



26 POS.

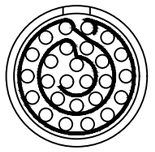

30 POS.

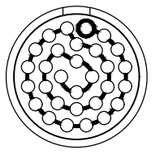

32 POS.

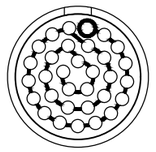

REV.	REVISION DESCRIPTION	ECR/ECN NO.	DATE	DRAWN BY	ANDY	DATE	2021-8-5

THIRD ANGLE PROJECTION

UNITS ■ mm □ INCH

ANGLES 0 PLC ± 3
1 PLC ± 2

TOLERANCES UNLESS OTHERWISE SPECIFIED

0 PLC ± 1.00
1 PLC ± 0.50
2 PLC ± 0.25
3 PLC ±
4 PLC ±

APPROVED BY	JACK	DATE	2021-8-5
CHECKED BY	CHARLES	DATE	2021-8-5

CIRCON®

Dongguan Circon Technology Co.,Ltd.

TITLE: 3K METAL CIRCULAR CONNECTOR FIXED SOCKETS

C	DRAWING NO.	A-M-248	REV. A0
	PART NO.	3KAF2P2XXX00C	

SIZE: A3 | SCALE: 1:1 | SHEET: 3 OF 3