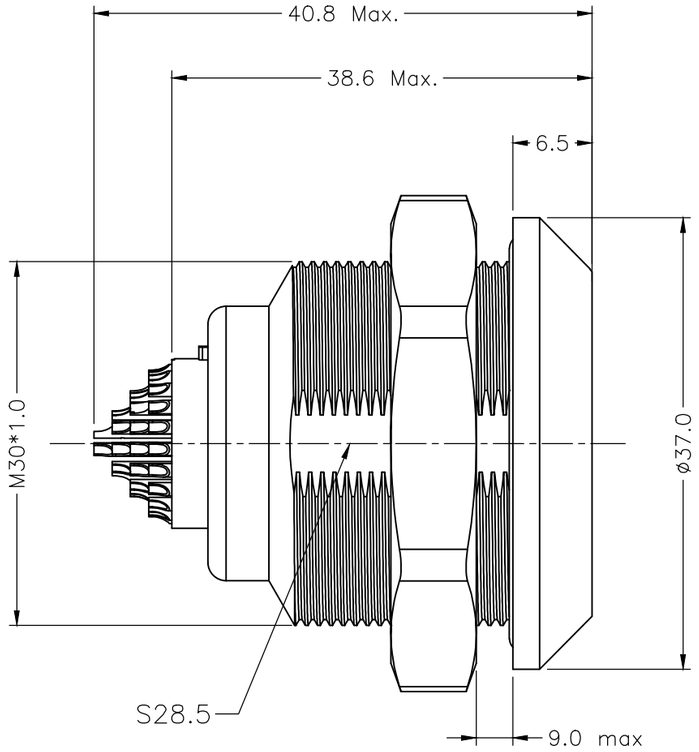

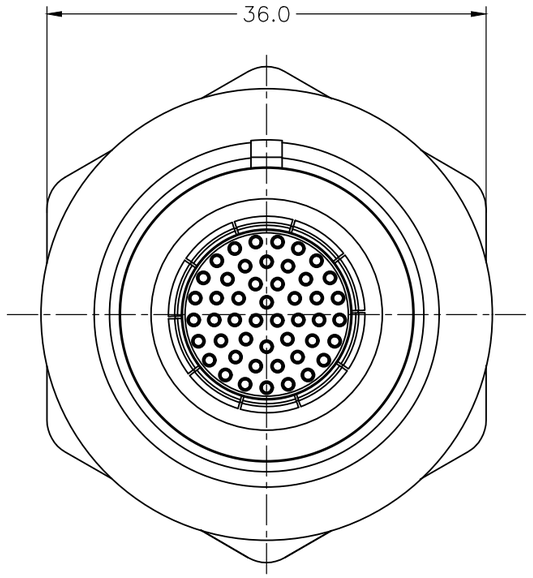

4K METAL CIRCULAR ASSEMBLY P/N DESCRIPTION :

4K A F2 X X XX X 00C
① ② ③ ④

① Insert
P=PEEK
1=PPS

② Plating
2=High Gold
A=Gold flash

③ Number of contacts
04=4Pin
⋮
48=48Pin

④ Keying

G= 0°	D= 95°
A= 30°	E= 120°
B= 45°	F= 145°
C= 60°	L= 75°

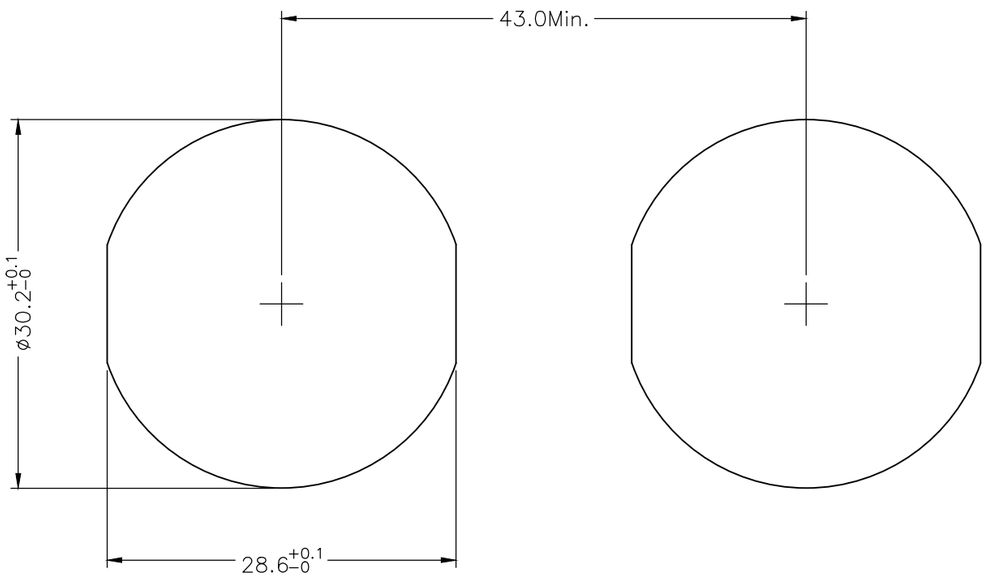

PANEL CUT-OUT

NOTE:

1. MATERIAL:

1.1.SHELL ASSEMBLY: COPPER ALLOY,OUTER SHELL Cr PLATING,
OTHER METALLIC COMPONENTS Ni PLATING

1.2.INSERT: THERMOPLASTIC,UL94V-0

1.3.CENTER CONTACT : COPPER ALLOY,Au PLATING

1.4.O-RING : ELASTOMER

2.NUMBER OF CONTACT : 4 TO 48 POSITION

3.RoHS DIRECTIVE COMPLIANCE

THIRD ANGLE PROJECTION		TOLERANCES UNLESS OTHERWISE SPECIFIED	
UNITS ■ mm □ INCH		0 PLC ± 1.00 1 PLC ± 0.50 2 PLC ± 0.25 3 PLC ± 4 PLC ±	Dongguan Circon Technology Co.,Ltd.
ANGLES 0 PLC ± 3° 1 PLC ± 2°			TITLE: 4K METAL CIRCULAR CONNECTOR FIXED SOCKET
APPROVED BY	JACK	DATE 2025-9-3	C DRAWING NO. A-M-520 REV. A0
CHECKED BY	CHARLES	DATE 2025-9-3	PART NO. 4KAF2XXXXX00C
DRAWN BY	ANDY	DATE 2025-9-3	SIZE: A3 SCALE: 1:1 SHEET: 1 OF 3

REV.	REVISION DESCRIPTION	ECR/ECN NO.	DATE

KEYING (PLUG FRONT VIEW):

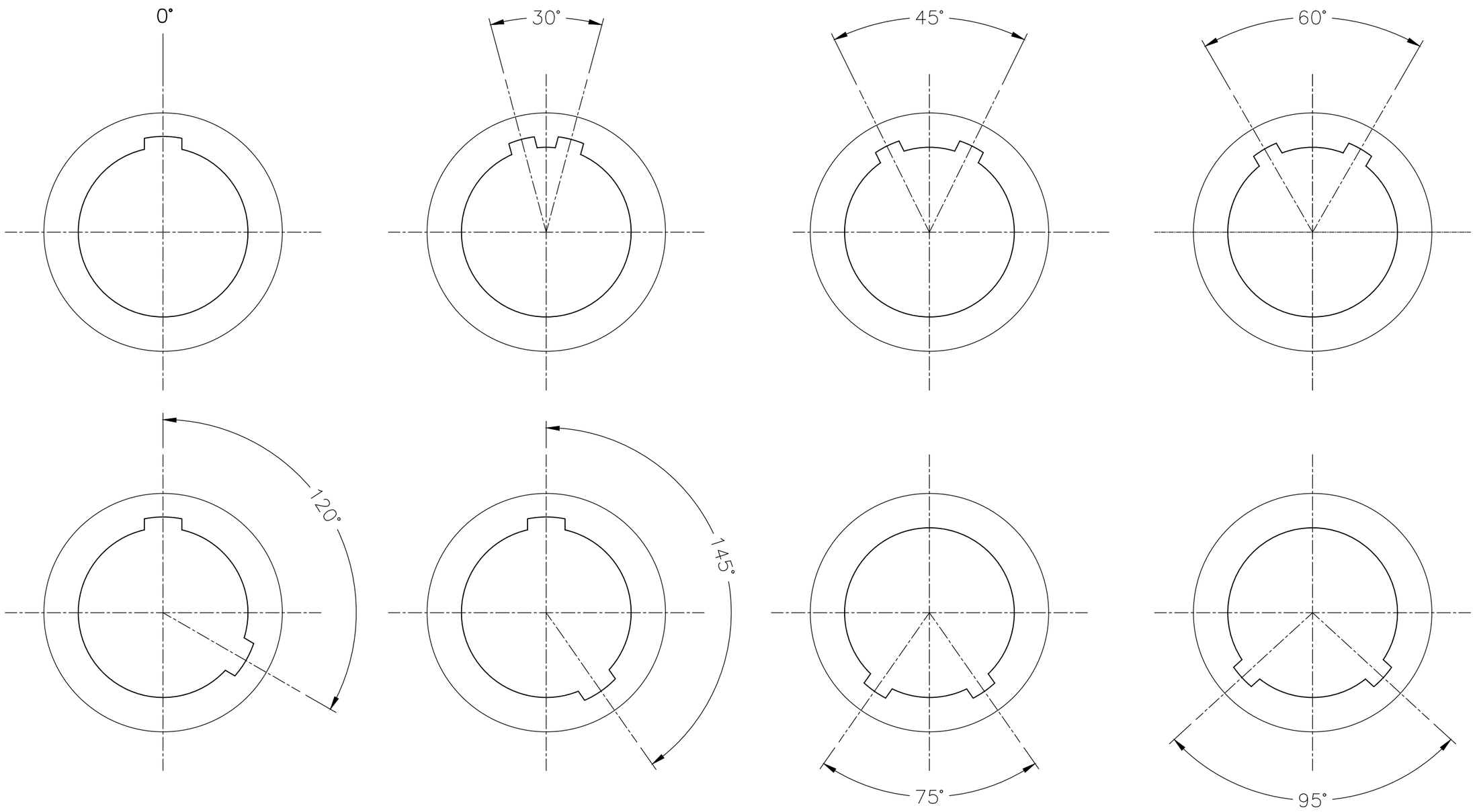

THIRD ANGLE PROJECTION		TOLERANCES UNLESS OTHERWISE SPECIFIED	
UNITS ■ mm □ INCH		0 PLC ± 1.00 1 PLC ± 0.50 2 PLC ± 0.25 3 PLC ± 4 PLC ±	
ANGLES 0 PLC ± 3° 1 PLC ± 2°			
APPROVED BY	JACK	DATE	2025-9-3
CHECKED BY	CHARLES	DATE	2025-9-3
DRAWN BY	ANDY	DATE	2025-9-3

CIRCON®

Dongguan Circon Technology Co.,Ltd.

TITLE: 4K METAL CIRCULAR CONNECTOR FIXED SOCKET

C	DRAWING NO.	A-M-520	REV. A0
	PART NO.	4KAF2XXXXX00C	

SIZE: A3 | SCALE: 1:1 | SHEET: 2 OF 3

REV.	REVISION DESCRIPTION	ECR/ECN NO.	DATE

VIEW FROM TERMINATION SIDE PIN PART

4 POS.

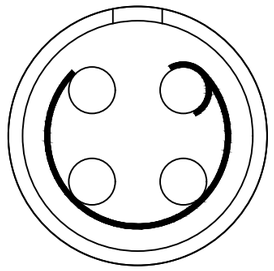

6 POS.

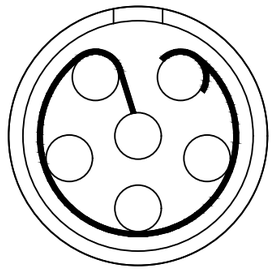

7 POS.

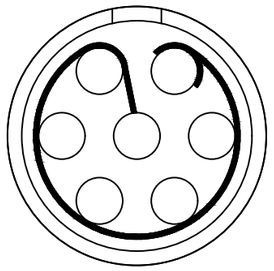

10 POS.

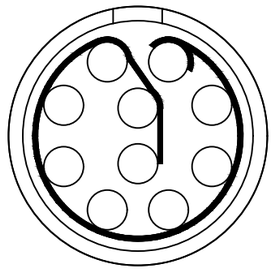

12 POS.

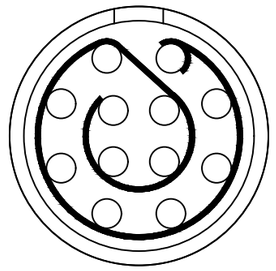

16 POS.

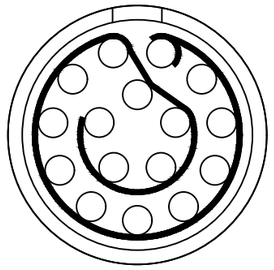

20 POS.

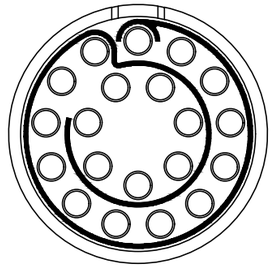

24 POS.

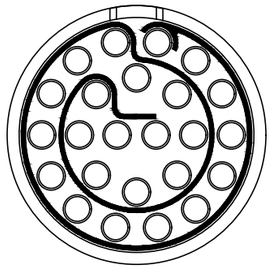

30 POS.

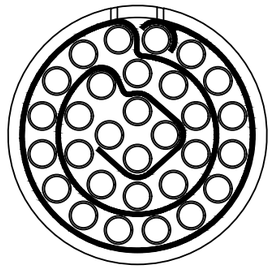

40 POS.

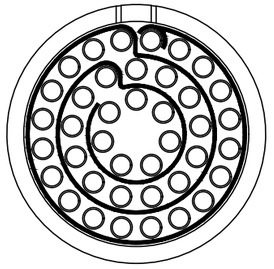

48 POS.

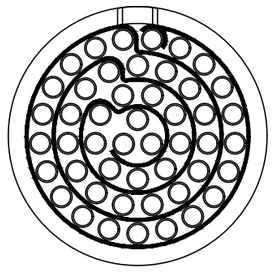

THIRD ANGLE PROJECTION		TOLERANCES UNLESS OTHERWISE SPECIFIED	0 PLC ± 1.00 1 PLC ± 0.50 2 PLC ± 0.25 3 PLC ± 4 PLC ±
UNITS ■ mm □ INCH			
ANGLES 0 PLC ± 3° 1 PLC ± 2°			

APPROVED BY	JACK	DATE	2025-9-3
CHECKED BY	CHARLES	DATE	2025-9-3
DRAWN BY	ANDY	DATE	2025-9-3

Dongguan Circon Technology Co.,Ltd.

TITLE: 4K METAL CIRCULAR CONNECTOR FIXED SOCKET

C	DRAWING NO.	A-M-520	REV. A0
	PART NO.	4KAF2XXXXX00C	

SIZE: A3 | SCALE: 1:1 | SHEET: 3 OF 3

REV.	REVISION DESCRIPTION	ECR/ECN NO.	DATE