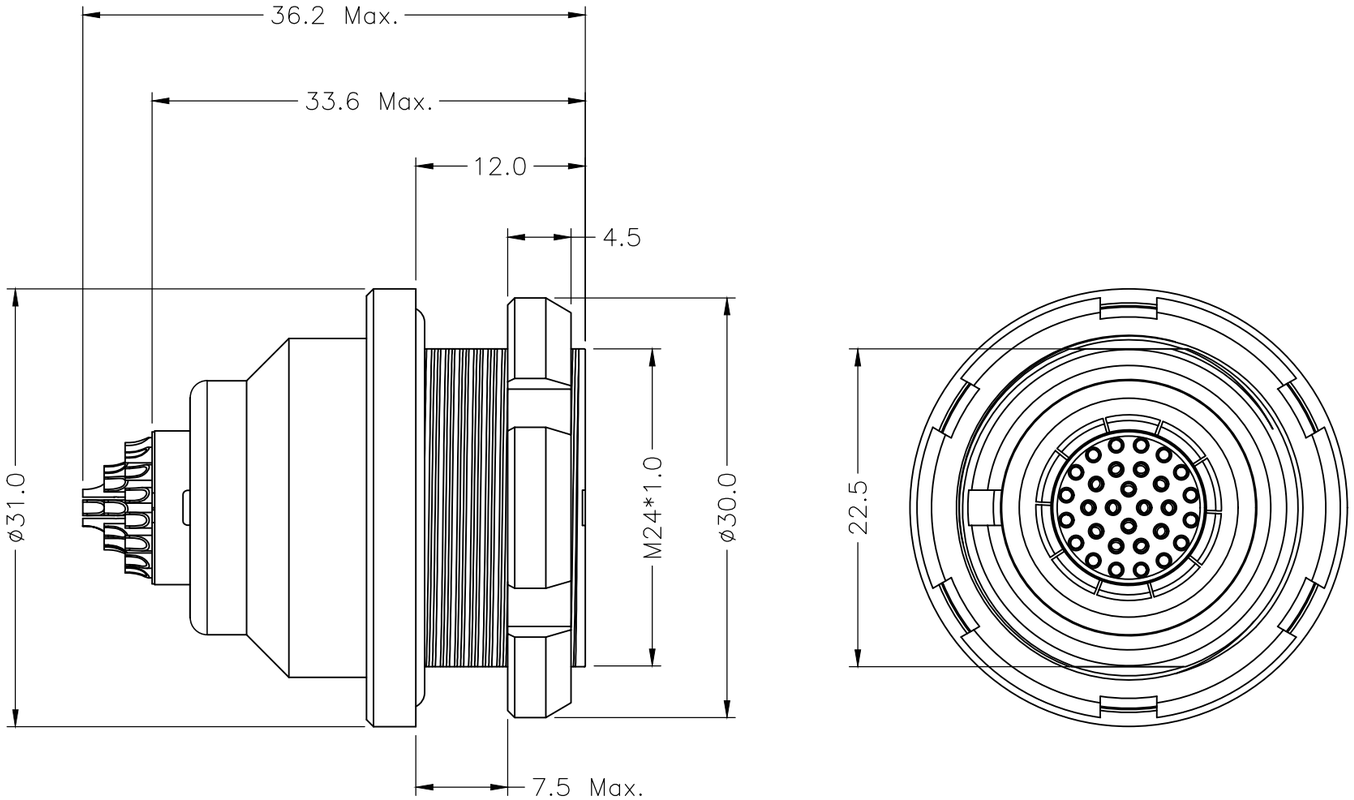

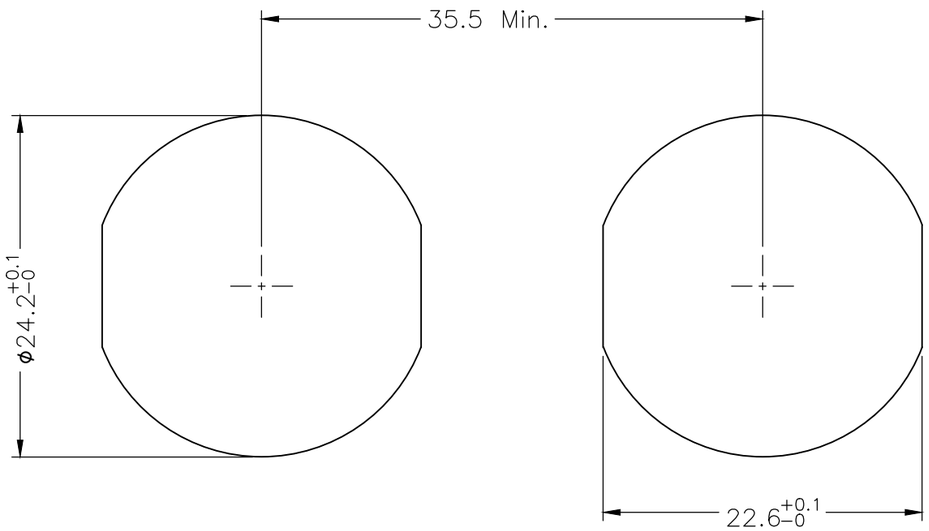

PANEL CUT-OUT

3K METAL CIRCULAR ASSEMBLY P/N DESCRIPTION :

3K A F3 X X XX X 00 C
① ② ③ ④

① Insert
P=PEEK
1=PPS

② Plating
2=High Gold
A=Gold flash

③ Number of contacts
02=2Pin
⋮
32=32Pin

④ Keying

G= 0°	D= 95°
A= 30°	E=120°
B= 45°	F=145°
C= 60°	L= 75°

NOTE:

1. MATERIAL:

1.1.SHELL ASSEMBLY: COPPER ALLOY,OUTER SHELL AND NUT Cr PLATING, OTHER METALLIC COMPONENTS Ni PLATING

1.2.INSERT: THERMOPLASTIC,UL94V-0

1.3.CENTER CONTACT : COPPER ALLOY,Au PLATING

1.4.O-RING : ELASTOMER

2.NUMBER OF CONTACT : 2 TO 32 POSITION

3.RoHS DIRECTIVE COMPLIANCE

THIRD ANGLE PROJECTION	TOLERANCES UNLESS OTHERWISE SPECIFIED						
UNITS ■ mm □ INCH	0 PLC ± 1.00 1 PLC ± 0.50 2 PLC ± 0.25 3 PLC ± 4 PLC ±						
ANGLES 0 PLC ± 3 1 PLC ± 2							
APPROVED BY	JACK	DATE	2026-3-27	C	DRAWING NO.	A-M-326	REV. A1
CHECKED BY	CHARLES	DATE	2026-3-27		PART NO.	3KAF3XXXXX00C	
DRAWN BY	ANDY	DATE	2026-3-27	SIZE: A3	SCALE: 1:1	SHEET: 1 OF 3	

REV.	REVISION DESCRIPTION	ECR/ECN NO.	DATE

Dongguan Circon Technology Co.,Ltd.

TITLE: 3K METAL CIRCULAR CONNECTOR FIXED SOCKETS

KEYING ANGLES (RECEPTACLE FRONT VIEW):

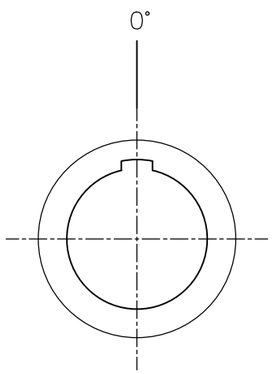

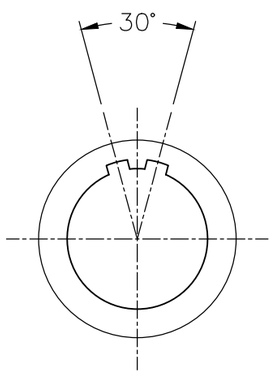

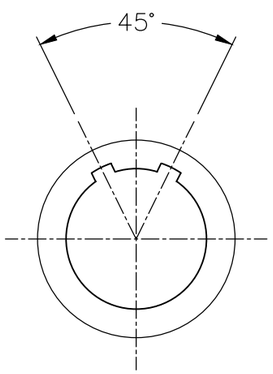

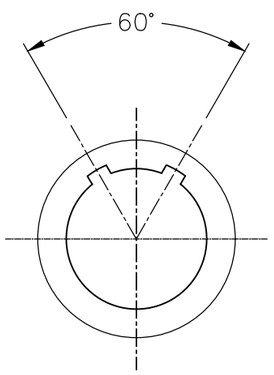

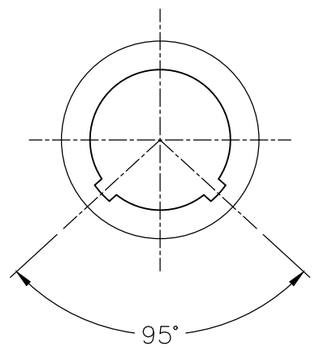

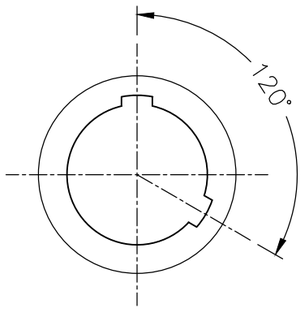

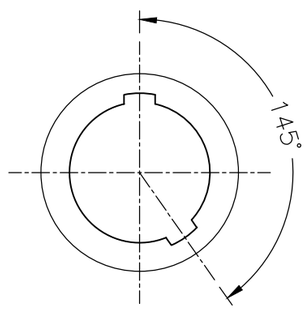

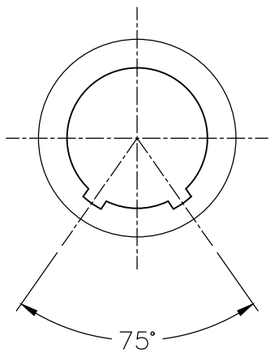

THIRD ANGLE PROJECTION	TOLERANCES UNLESS OTHERWISE SPECIFIED
UNITS ■ mm □ INCH	0 PLC ± 1.00 1 PLC ± 0.50 2 PLC ± 0.25 3 PLC ± 4 PLC ±
ANGLES 0 PLC ± 3 1 PLC ± 2	

Dongguan Circon Technology Co.,Ltd.

TITLE: 3K METAL CIRCULAR CONNECTOR FIXED SOCKETS

APPROVED BY	JACK	DATE	2026-3-27	C	REV. A1
CHECKED BY	CHARLES	DATE	2026-3-27	DRAWING NO.	A-M-326
DRAWN BY	ANDY	DATE	2026-3-27	PART NO.	3KAF3XXXXX00C
SIZE: A3	SCALE: 1:1	SHEET: 2 OF 3			

REV.	REVISION DESCRIPTION	ECR/ECN NO.	DATE

VIEW FROM TERMINATION SIDE PIN PART

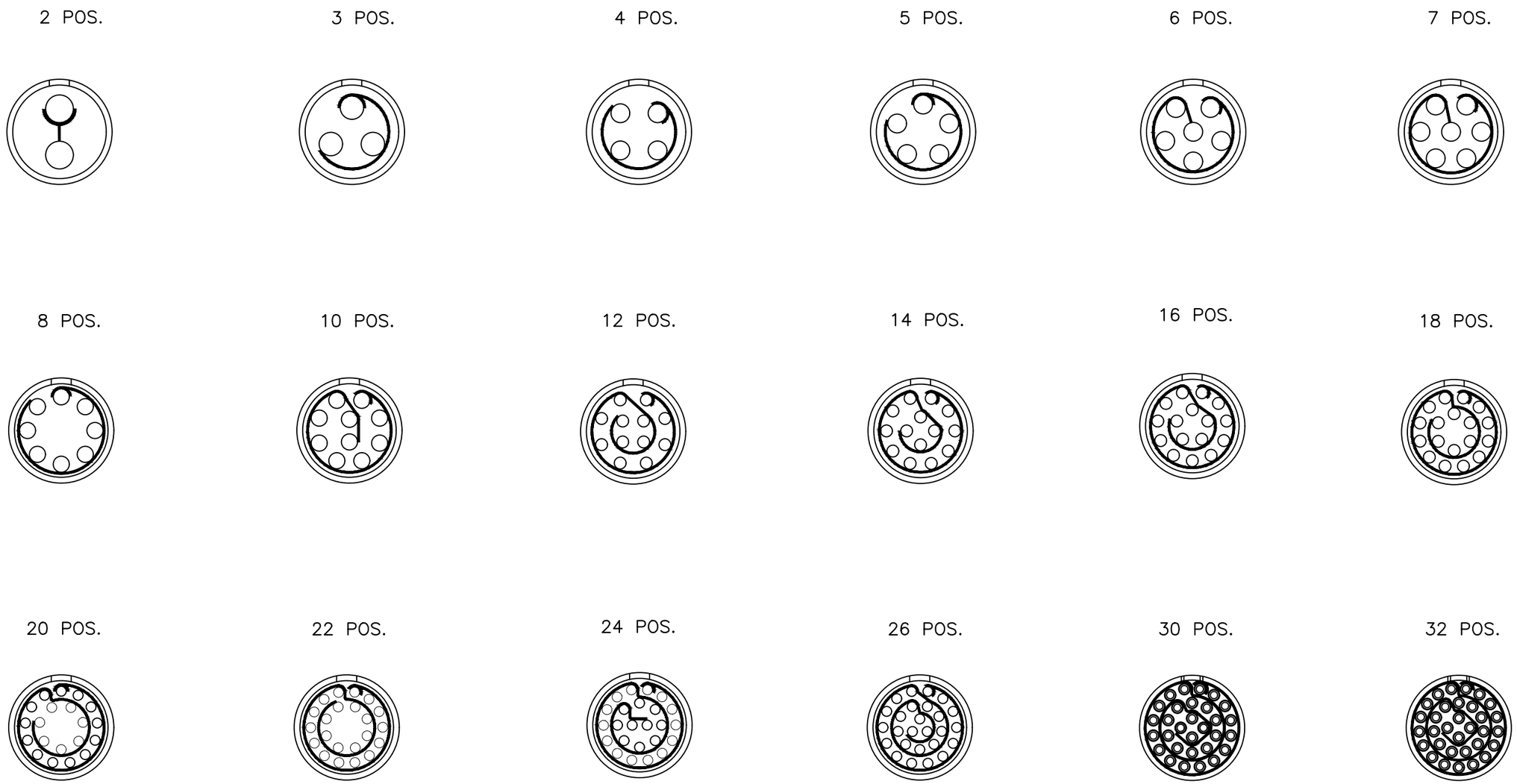

THIRD ANGLE PROJECTION		TOLERANCES UNLESS OTHERWISE SPECIFIED		CIRCON® Dongguan Circon Technology Co.,Ltd.			
UNITS ■ mm □ INCH		0 PLC ± 1.00 1 PLC ± 0.50 2 PLC ± 0.25 3 PLC ± 4 PLC ±		TITLE: 3K METAL CIRCULAR CONNECTOR FIXED SOCKETS			
ANGLES 0 PLC ± 3 1 PLC ± 2							
APPROVED BY	JACK	DATE	2026-3-27	C	DRAWING NO.	A-M-326	REV. A1
CHECKED BY	CHARLES	DATE	2026-3-27		PART NO.	3KAF3XXXXX00C	
DRAWN BY	ANDY	DATE	2026-3-27	SIZE: A3	SCALE: 1:1	SHEET: 3 OF 3	

REV.	REVISION DESCRIPTION	ECR/ECN NO.	DATE