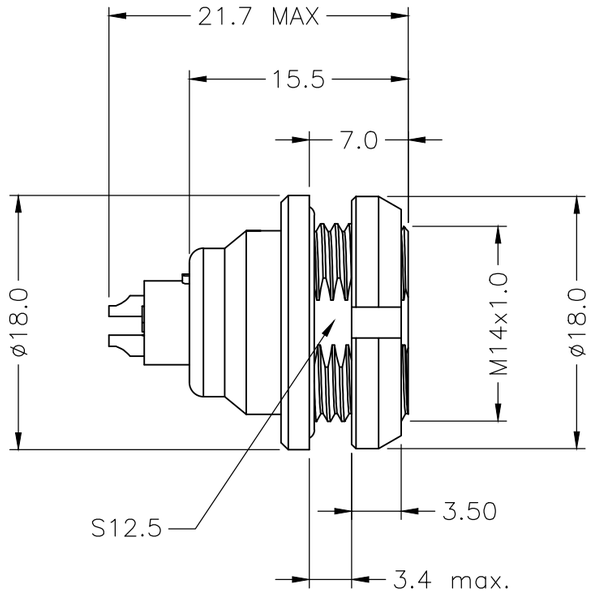

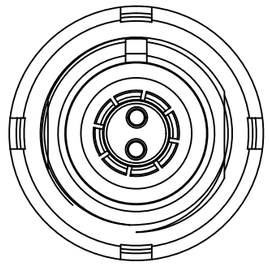

OK METAL CIRCULAR ASSEMBLY P/N DESCRIPTION :

OK A F3 X X XX X 00 C
① ② ③ ④

① Insert
P=PEEK
1=PPS

② Plating
2=High Gold
A=Gold flash

③ Number of contacts
02=2Pin
⋮
09=9Pin

④ Keying

G=0°	D=95°
A=30°	E=120°
B=45°	F=145°
C=60°	L=75°

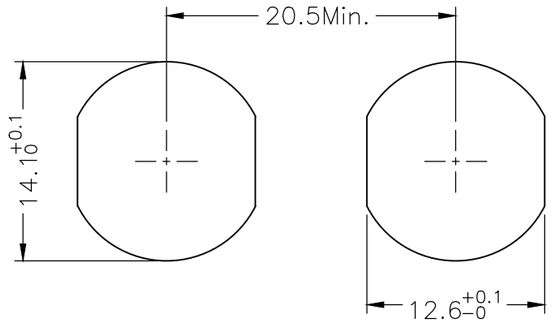

PANEL CUT-OUT

NOTE:

1. MATERIAL:

1.1.SHELL ASSEMBLY: COPPER ALLOY,OUTER SHELL AND NUT Cr PLATING, OTHER METALLIC COMPONENTS Ni PLATING

1.2.INSERT: THERMOPLASTIC,UL94V-0

1.3.CENTER CONTACT : COPPER ALLOY,Au PLATING

1.4.O-RING : ELASTOMER

2.NUMBER OF CONTACT : 2 TO 9 POSITION

3.RoHS DIRECTIVE COMPLIANCE

REV.	REVISION DESCRIPTION	ECR/ECN NO.	DATE
A1	REVISE THE NUT DIAGRAM	NA	2026/3/2

THIRD ANGLE PROJECTION		TOLERANCES UNLESS OTHERWISE SPECIFIED	
UNITS ■ mm □ INCH		0 PLC ± 1.00 1 PLC ± 0.50 2 PLC ± 0.25 3 PLC ± 4 PLC ±	
ANGLES 0 PLC ± 3 1 PLC ± 2			
APPROVED BY	JACK	DATE	2026-3-2
CHECKED BY	CHARLES	DATE	2026-3-2
DRAWN BY	ANDY	DATE	2026-3-2

CIRCON®
Dongguan Circon Technology Co.,Ltd.

TITLE: OK METAL CIRCULAR CONNECTOR FIXED SOCKETS

C	DRAWING NO.	A-M-230	REV. A1
	PART NO.	OKAF3XXXXX00C	
SIZE: A3	SCALE: 1:1	SHEET: 1 OF 2	

VIEW FROM TERMINATION SIDE PIN PART

2 POS. 3 POS. 4 POS. 5 POS. 6 POS. 7 POS. 9 POS.

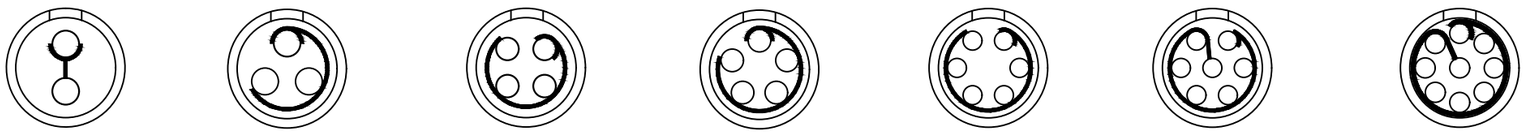

KEYING ANGLES (RECEPTACLE FRONT VIEW):

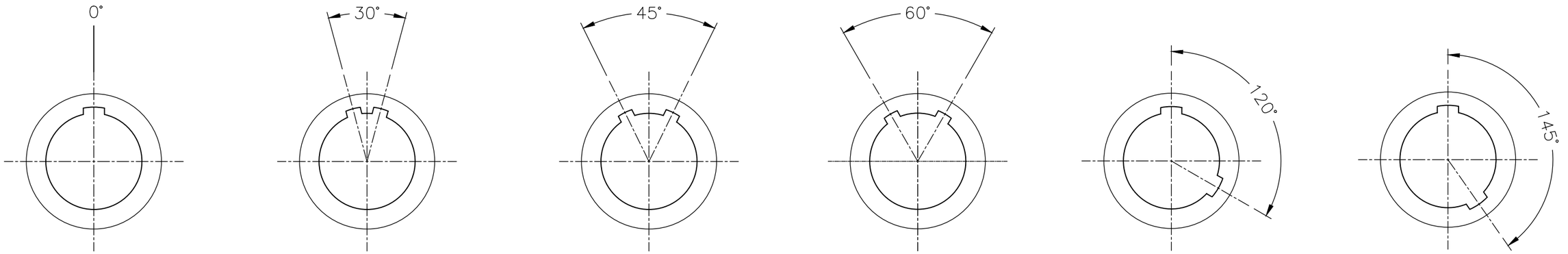

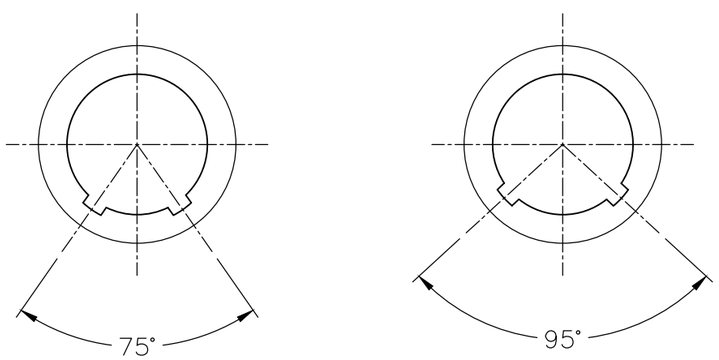

THIRD ANGLE PROJECTION			TOLERANCES UNLESS OTHERWISE SPECIFIED					
UNITS ■ mm □ INCH			0 PLC ± 1.00 1 PLC ± 0.50 2 PLC ± 0.25 3 PLC ± 4 PLC ±					
ANGLES 0 PLC ± 3 1 PLC ± 2								
			APPROVED BY	JACK	DATE	2026-3-2		
A1	REVISE THE NUT DIAGRAM	NA	2026/3/2	CHECKED BY	CHARLES	DATE	2026-3-2	
REV.	REVISION DESCRIPTION	ECR/ECN NO.	DATE	DRAWN BY	ANDY	DATE	2026-3-2	

CIRCON®

Dongguan Circon Technology Co.,Ltd.

TITLE: 0K METAL CIRCULAR CONNECTOR FIXED SOCKETS

C	DRAWING NO.	A-M-230	REV. A1
	PART NO.	0KAF3XXXXX00C	
SIZE: A3	SCALE: 1:1	SHEET: 2 OF 2	