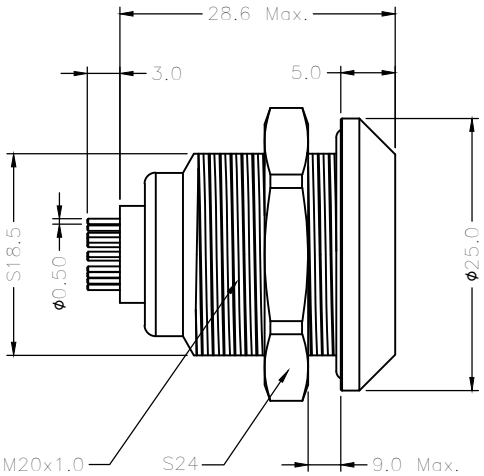

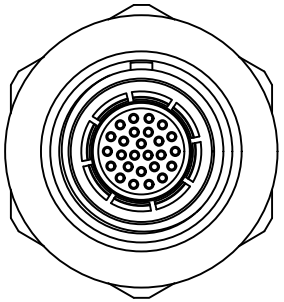

2K MRTAL CIRCULAR ASSEMBLY P/N DESCRIPTION :

2K A F4 X X XX X 00 C
①② ③ ④

① Insert
P=PEEK
1=PPS

② Plating
2=High Gold
A=Gold flash

③ Number of contacts
26=26Pin

④ Keying
G= 0° D= 95°
A= 30° E=120°
B=45° F=145°
C=60° L= 75°

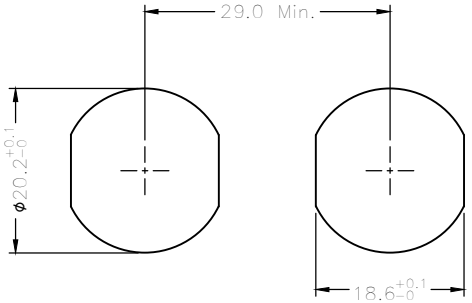

PANEL CUT-OUT

NOTE:

1. MATERIAL:

1.1.SHELL ASSEMBLY: COPPER ALLOY,OUTER SHELL Cr PLATING,
OTHER METALLIC COMPONENTS Ni PLATING

1.2.INSERT: THERMOPLASTIC,UL94V-0

1.3.CENTER CONTACT : COPPER ALLOY,Au PLATING

1.4.O-RING : ELASTOMER

2.NUMBER OF CONTACT : 26 POSITION

3.RoHS DIRECTIVE COMPLIANCE

THIRD ANGLE PROJECTION		TOLERANCES UNLESS OTHERWISE SPECIFIED		Dongguan Circon Technology Co.,Ltd.			
UNITS ■ mm □ INCH		0 PLC ± 1.00 1 PLC ± 0.50 2 PLC ± 0.25 3 PLC ± 4 PLC ±		TITLE: 2K METAL CIRCULAR CONNECTOR FIXED SOCKETS			
ANGLES 0 PLC ± 3 1 PLC ± 2				C	DRAWING NO. A-M-076		REV. A0
APPROVED BY	JACK	DATE	2019-5-18		PART NO. 2KAF4XXXXX00C		
CHECKED BY	CHARLES	DATE	2019-5-18				
DRAWN BY	ANDY	DATE	2019-5-18	SIZE: A3	SCALE: 1:1	SHEET: 1 OF 2	

REV.	REVISION DESCRIPTION	ECR/ECN NO.	DATE

VIEW FROM TERMINATION SIDE PIN PART

26 POS.



KEYING ANGLES (RECEPTACLE FRONT VIEW):

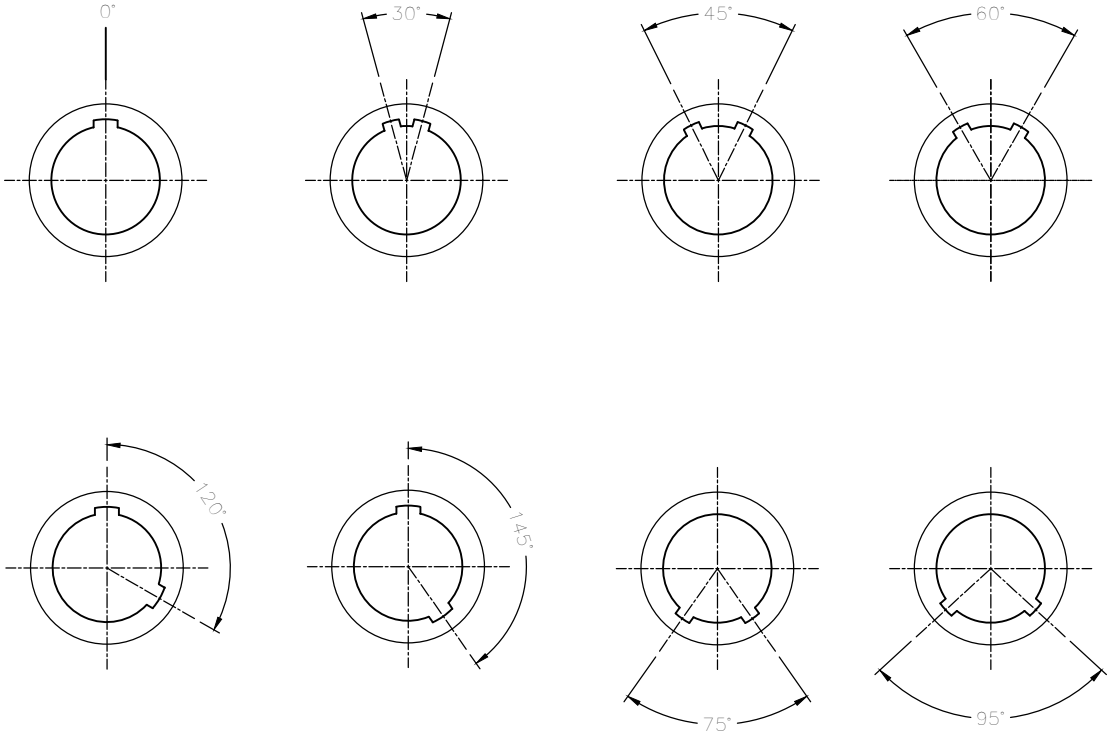

PCB LAYOUT:

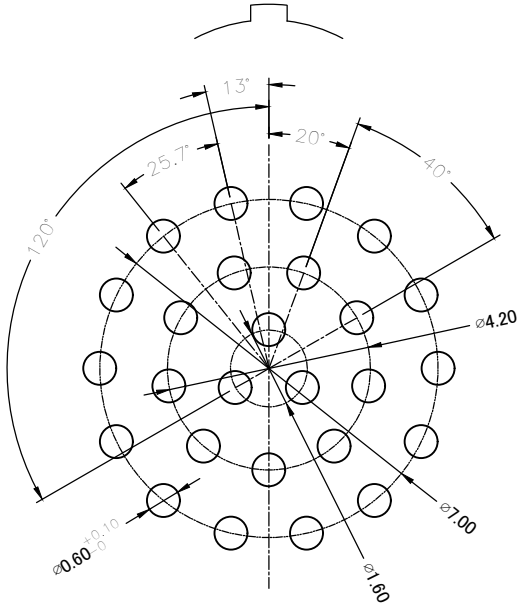

THIRD ANGLE PROJECTION		TOLERANCES UNLESS OTHERWISE SPECIFIED		Dongguan Circon Technology Co.,Ltd.			
UNITS ■ mm □ INCH		0 PLC ± 1.00 1 PLC ± 0.50 2 PLC ± 0.25 3 PLC ± 4 PLC ±		TITLE: 2K METAL CIRCULAR CONNECTOR FIXED SOCKETS			
ANGLES 0 PLC ± 3 1 PLC ± 2				C	DRAWING NO. A-M-076		REV. A0
					PART NO. 2KAF4XXXXX00C		
APPROVED BY	JACK	DATE	2019-5-18				
CHECKED BY	CHARLES	DATE	2019-5-18				
DRAWN BY	ANDY	DATE	2019-5-18	SIZE: A3	SCALE: 1:1	SHEET: 2 OF 2	

REV.	REVISION DESCRIPTION	ECR/ECN NO.	DATE