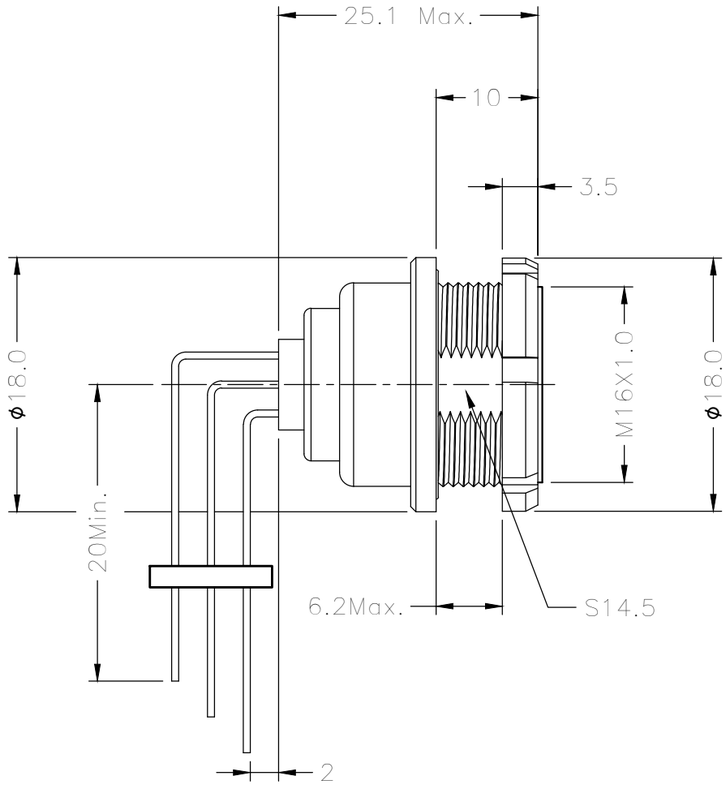

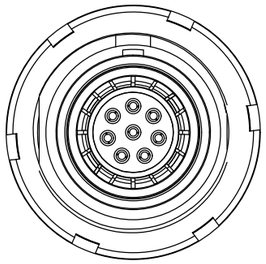

1K METAL CIRCULAR ASSEMBLY P/N DESCRIPTION :

1K A F5 X X XX X 00 C
①②③④

① Insert
P=PEEK
1=PPS

② Plating
2=High Gold
A=Gold flash

③ Number of contacts
08=8Pin

④ Keying

G= 0°	D= 95°
A= 30°	E=120°
B=45°	F=145°
C=60°	L= 75°

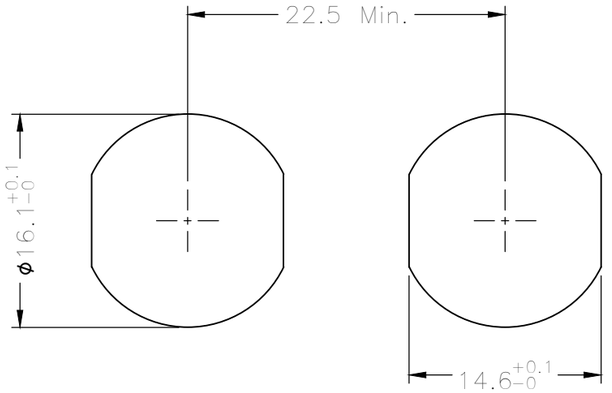

PANEL CUT-OUT

NOTE:

1. MATERIAL:

1.1.SHELL ASSEMBLY: COPPER ALLOY,OUTER SHELL Cr PLATING,
OTHER METALLIC COMPONENTS Ni PLATING

1.2.INSERT: THERMOPLASTIC,UL94V-0

1.3.CENTER CONTACT : COPPER ALLOY,Au PLATING

1.4.O-RING : ELASTOMER

1.5.CENTER WIRE : COPPER ALLOY

2.NUMBER OF CONTACT : 8 POSITION

3.RoHS DIRECTIVE COMPLIANCE

REV.	REVISION DESCRIPTION	ECR/ECN NO.	DATE

THIRD ANGLE PROJECTION		TOLERANCES UNLESS OTHERWISE SPECIFIED		Dongguan Circon Technology Co.,Ltd.	
UNITS ■ mm □ INCH		0 PLC ± 1.00 1 PLC ± 0.50 2 PLC ± 0.25 3 PLC ± 4 PLC ±		TITLE: 1K METAL CIRCULAR CONNECTOR FIXED 90° SOCKETS	
ANGLES 0 PLC ± 3 1 PLC ± 2				C	DRAWING NO. A-M-089 / PART NO. 1KAF5XXXXX00C / REV. A0
APPROVED BY	JACK	DATE	2019-7-18		
CHECKED BY	CHARLES	DATE	2019-7-18		
DRAWN BY	ANDY	DATE	2019-7-18	SIZE: A3	SCALE: 1:1 / SHEET: 1 OF 2

VIEW FROM TERMINATION SIDE PIN PART

8 POS.



KEYING ANGLES (RECEPTACLE FRONT VIEW):

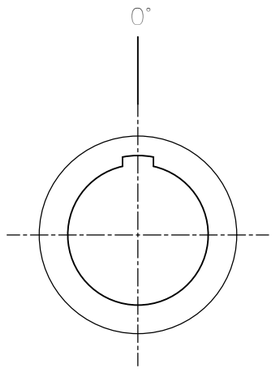

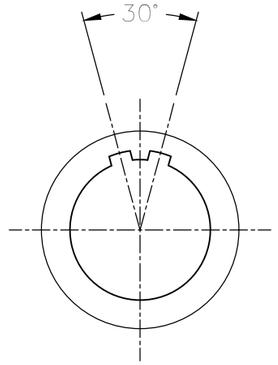

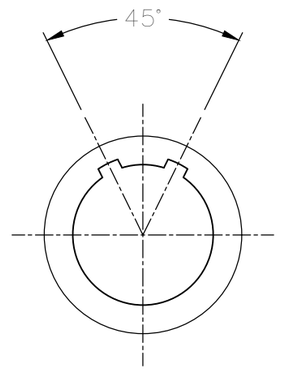

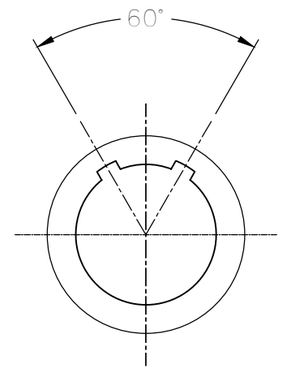

PCB LAYOUT:

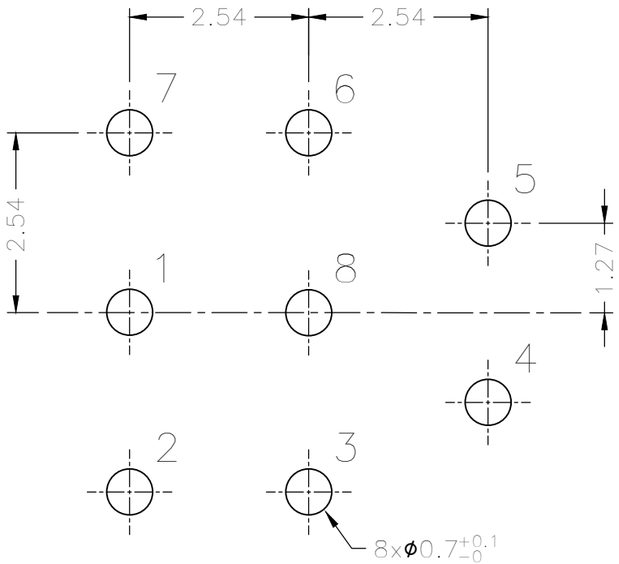

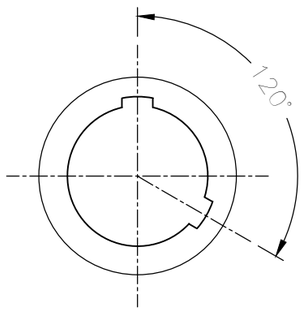

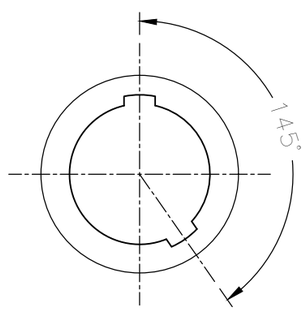

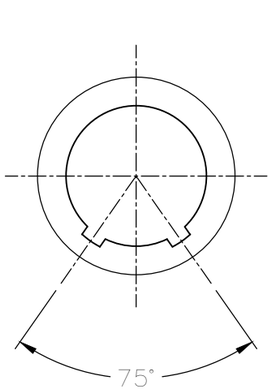

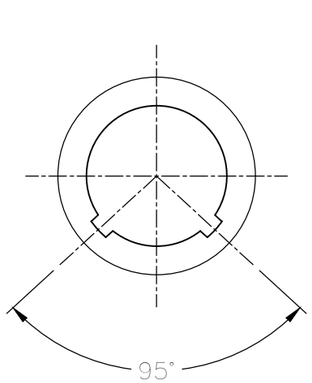

THIRD ANGLE PROJECTION		TOLERANCES UNLESS OTHERWISE SPECIFIED	
UNITS ■ mm □ INCH		0 PLC ± 1.00 1 PLC ± 0.50 2 PLC ± 0.25 3 PLC ± 4 PLC ±	
ANGLES 0 PLC ± 3 1 PLC ± 2			
APPROVED BY	JACK	DATE	2019-7-18
CHECKED BY	CHARLES	DATE	2019-7-18
DRAWN BY	ANDY	DATE	2019-7-18

Dongguan Circon Technology Co.,Ltd.

TITLE: 1K METAL CIRCULAR CONNECTOR FIXED 90° SOCKETS

C	DRAWING NO.	A-M-089	REV. A0
	PART NO.	1KAF5XXXXX00C	
SIZE: A3	SCALE: 1:1	SHEET: 2 OF 2	

REV.	REVISION DESCRIPTION	ECR/ECN NO.	DATE