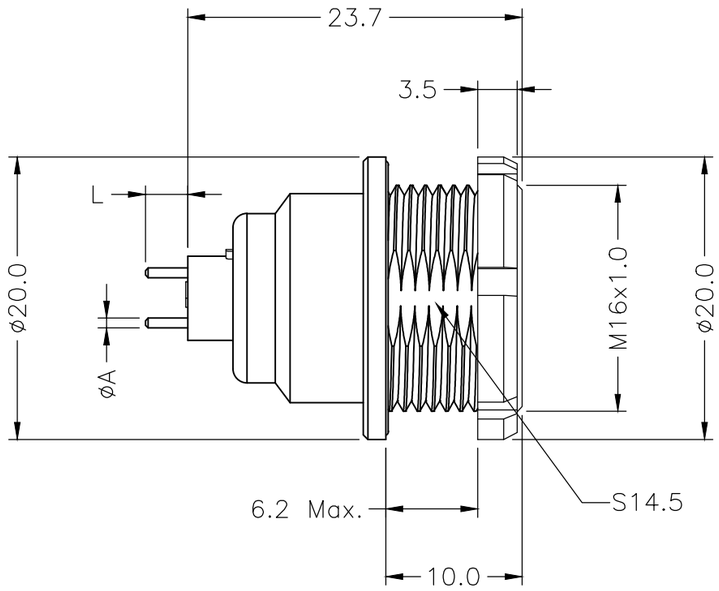

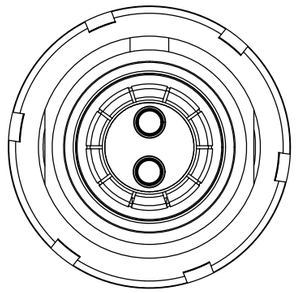

Pin	øA	L
2~8Pin	0.70	3.0
10~14Pin	0.50	4.0

1K METAL CIRCULAR ASSEMBLY P/N DESCRIPTION :

1K A F9 X X XX X 00 C
① ② ③ ④

① Insert
P=PEEK
1=PPS

② Plating
2=High Gold
A=Gold flash

③ Number of contacts
02=2Pin
⋮
16=16Pin

④ Keying

G= 0°	D= 95°
A= 30°	E=120°
B= 45°	F=145°
C= 60°	L= 75°

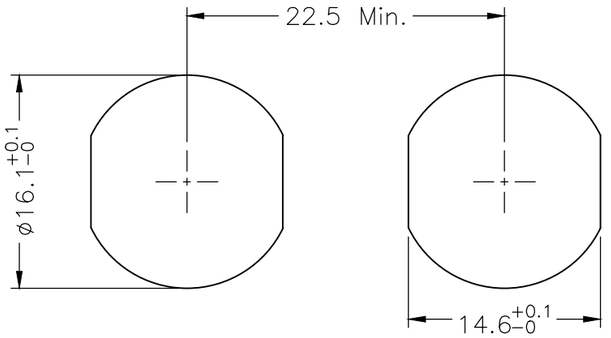

PANEL CUT−OUT

NOTE:

1. MATERIAL:

1.1.SHELL ASSEMBLY: COPPER ALLOY,OUTER SHELL Cr PLATING,
OTHER METALLIC COMPONENTS Ni PLATING

1.2.INSERT: THERMOPLASTIC,UL94V−0

1.3.CENTER CONTACT : COPPER ALLOY,Au PLATING

1.4.O−RING : ELASTOMER

2.NUMBER OF CONTACT : 2 TO 16 POSITION

3.RoHS DIRECTIVE COMPLIANCE

REV.	REVISION DESCRIPTION	ECR/ECN NO.	DATE

THIRD ANGLE PROJECTION

UNITS ■ mm □ INCH

ANGLES 0 PLC ± 3
1 PLC ± 2

TOLERANCES UNLESS OTHERWISE SPECIFIED
0 PLC ± 1.00
1 PLC ± 0.50
2 PLC ± 0.25
3 PLC ±
4 PLC ±

APPROVED BY	JACK	DATE	2020−10−23
CHECKED BY	CHARLES	DATE	2020−10−23
DRAWN BY	ANDY	DATE	2020−10−23

CIRCON®
Dongguan Circon Technology Co.,Ltd.

TITLE: 1K METAL CIRCULAR CONNECTOR
FIXED SOCKETS−PCB CONTACTS

C	DRAWING NO.	A−M−155	REV. A0
	PART NO.	1KAF9XXXXX00C	

SIZE: A3 SCALE: 1:1 SHEET: 1 OF 3

VIEW FROM TERMINATION SIDE PIN PART

2 POS. 3 POS. 4 POS. 5 POS. 6 POS. 7 POS. 8 POS. 10 POS. 14 POS. 16 POS.



KEYING ANGLES (RECEPTACLE FRONT VIEW):

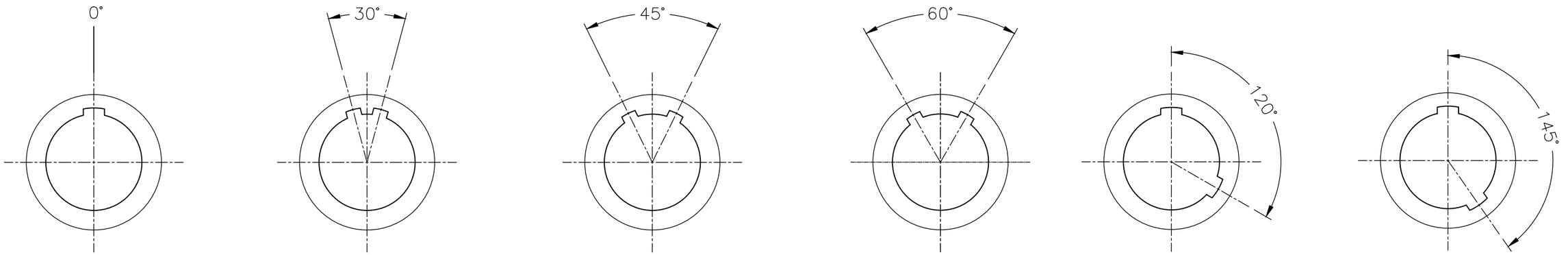

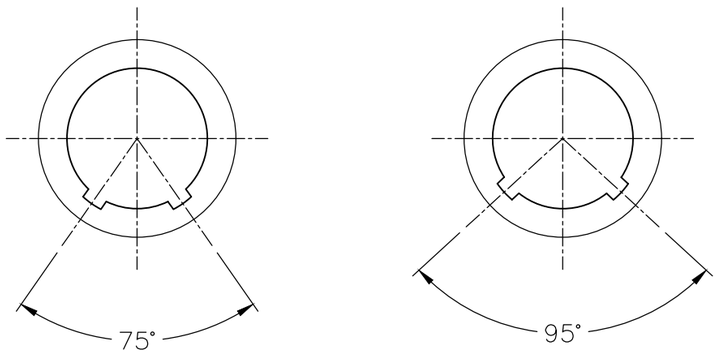

THIRD ANGLE PROJECTION		TOLERANCES UNLESS OTHERWISE SPECIFIED	
UNITS ■ mm □ INCH		0 PLC ± 1.00 1 PLC ± 0.50 2 PLC ± 0.25 3 PLC ± 4 PLC ±	
ANGLES 0 PLC ± 3 1 PLC ± 2			
APPROVED BY	JACK	DATE	2020-10-23
CHECKED BY	CHARLES	DATE	2020-10-23
DRAWN BY	ANDY	DATE	2020-10-23

Dongguan Circon Technology Co.,Ltd.

TITLE: 1K METAL CIRCULAR CONNECTOR
FIXED SOCKETS–PCB CONTACTS

C	DRAWING NO.	A–M–155	REV. A0
	PART NO.	1KAF9XXXXX00C	
SIZE: A3	SCALE: 1:1	SHEET: 2 OF 3	

REV.	REVISION DESCRIPTION	ECR/ECN NO.	DATE

PCB DRILLING PATTERN:

2 POS.

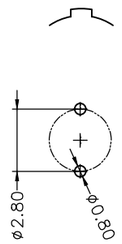

3 POS.

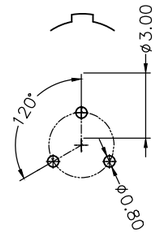

4 POS.

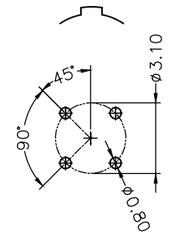

5 POS.

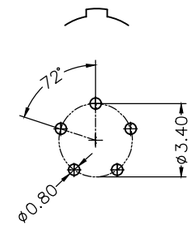

6 POS.

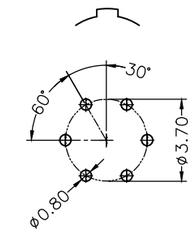

7 POS.

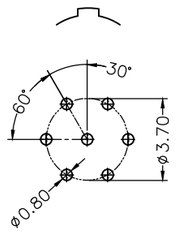

8 POS.

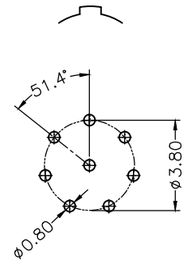

10 POS.

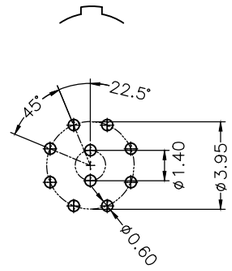

14 POS.

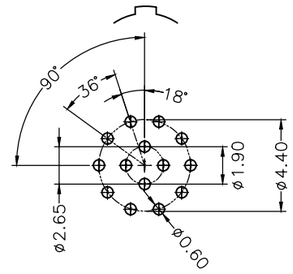

16 POS.

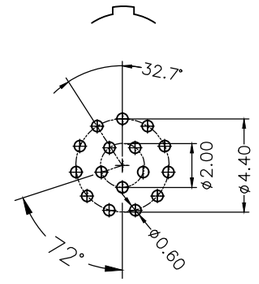

THIRD ANGLE PROJECTION		TOLERANCES UNLESS OTHERWISE SPECIFIED	
UNITS ■ mm □ INCH		0 PLC ± 1.00 1 PLC ± 0.50 2 PLC ± 0.25 3 PLC ± 4 PLC ±	
ANGLES 0 PLC ± 3 1 PLC ± 2			
APPROVED BY	JACK	DATE	2020-10-23
CHECKED BY	CHARLES	DATE	2020-10-23
DRAWN BY	ANDY	DATE	2020-10-23

Dongguan Circon Technology Co.,Ltd.

TITLE: 1K METAL CIRCULAR CONNECTOR FIXED SOCKETS–PCB CONTACTS

C	DRAWING NO.	A–M–155	REV. A0
	PART NO.	1KAF9XXXXX00C	
SIZE: A3	SCALE: 1:1	SHEET: 3 OF 3	

REV.	REVISION DESCRIPTION	ECR/ECN NO.	DATE