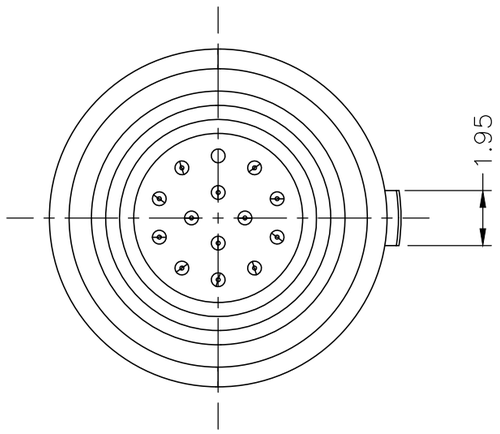

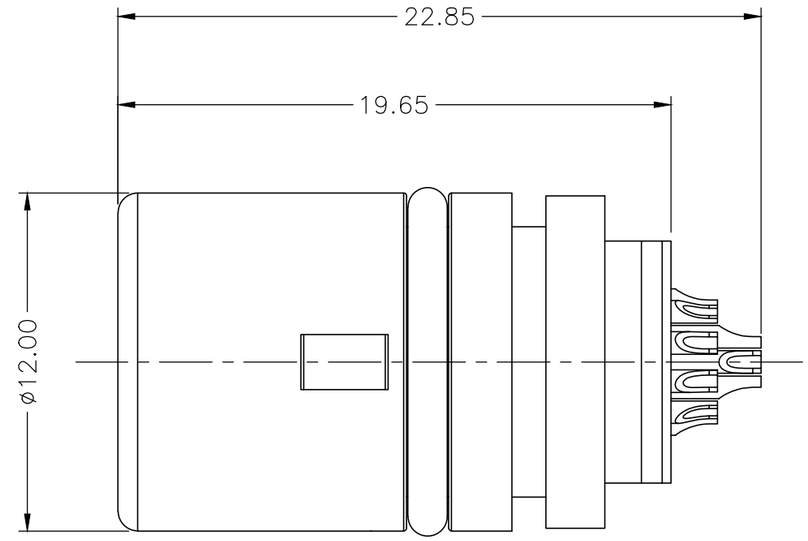

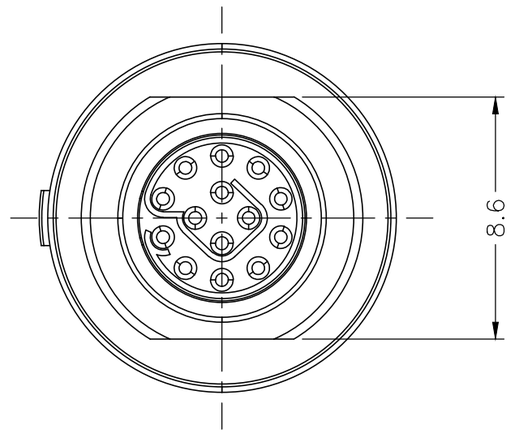

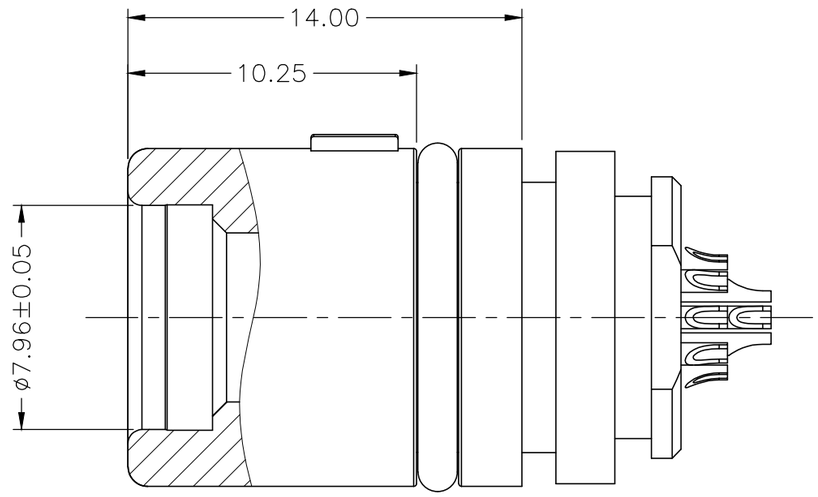

NOTE:

1.MATERIAL:

1.1.SHELL : COPPER ALLOY, Ni PLATING

OTHER METALLIC COMPONENTS Ni PLATING

1.2.INSERT: THERMOPLASTIC,UL94V–0

1.3.CENTER CONTACT : COPPER ALLOY,Au PLATING

1.4.O–RING : ELASTOMER

2.NUMBER OF CONTACT : 14 POSITION

3.RoHS DIRECTIVE COMPLIANCE

REV.	REVISION DESCRIPTION	ECR/ECN NO.	DATE

THIRD ANGLE PROJECTION		TOLERANCES UNLESS OTHERWISE SPECIFIED	
UNITS ■ mm □ INCH		0 PLC ± 1.00 1 PLC ± 0.50 2 PLC ± 0.25 3 PLC ± 4 PLC ±	
ANGLES 0 PLC ± 3° 1 PLC ± 2°			
APPROVED BY	JACK	DATE	2023–12–7
CHECKED BY	CHARLES	DATE	2023–12–7
DRAWN BY	ANDY	DATE	2023–12–7

Dongguan Circon Technology Co.,Ltd.

TITLE: 1K METAL CIRCULAR CONNECTOR
STRAIGHT PLUGS–EASY SEPARATION

C	DRAWING NO.	A–M–263	REV. A0
	PART NO.	AM2631A14G000	
SIZE: A3	SCALE: 1:1	SHEET: 1 OF 1	