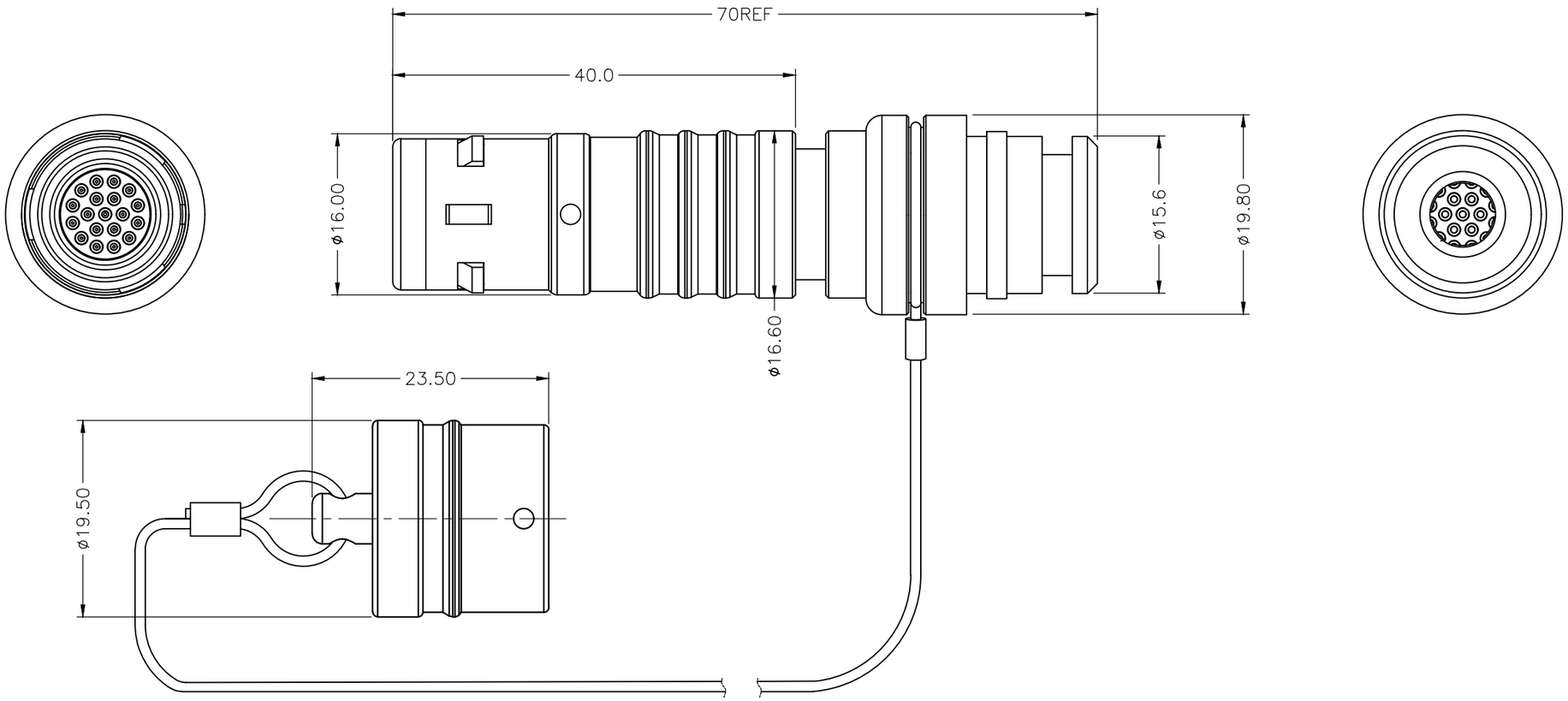

NOTE:

1. MATERIAL:

1.1.OUTER SHELL ASSEMBLY: COPPER ALLOY,OUTER SHELL Cr PLATING,
OTHER METALLIC COMPONENTS Ni PLATING

1.2.INSERT: THERMOPLASTIC,UL94V-0

1.3.CENTER CONTACT: COPPER ALLOY,Au PLATING

1.4.SPLIT INSERT CARRIER A&B: THERMOPLASTIC

1.5.O-RING: CONDUCTIVE ELASTOMER

1.6.CABLE COLLET: COPPER ALLOY,Ni PLATING

1.7.COLLET NUT: COPPER ALLOY,Cr PLATING,

1.8.MALE CAPS : COPPER ALLOY,Cr PLATING

2.RoHS DIRECTIVE COMPLIANCE

REV.	REVISION DESCRIPTION	ECR/ECN NO.	DATE

THIRD ANGLE PROJECTION		TOLERANCES UNLESS OTHERWISE SPECIFIED	
UNITS ■ mm □ INCH		0 PLC ± 1.00 1 PLC ± 0.50 2 PLC ± 0.25 3 PLC ± 4 PLC ±	
ANGLES 0 PLC ± 3° 1 PLC ± 2°			
APPROVED BY	JACK	DATE	2023-7-12
CHECKED BY	CHARLES	DATE	2023-7-12
DRAWN BY	ANDY	DATE	2023-7-12

Dongguan Circon Technology Co.,Ltd.

TITLE: 2K METAL CIRCULAR CONNECTOR
Straight Plugs-Photoelectric conversion

C	DRAWING NO.	A-M-405	REV. A0
	PART NO.	2KHM1P219G60G	
SIZE: A3	SCALE: 1:1	SHEET: 1 OF 2	

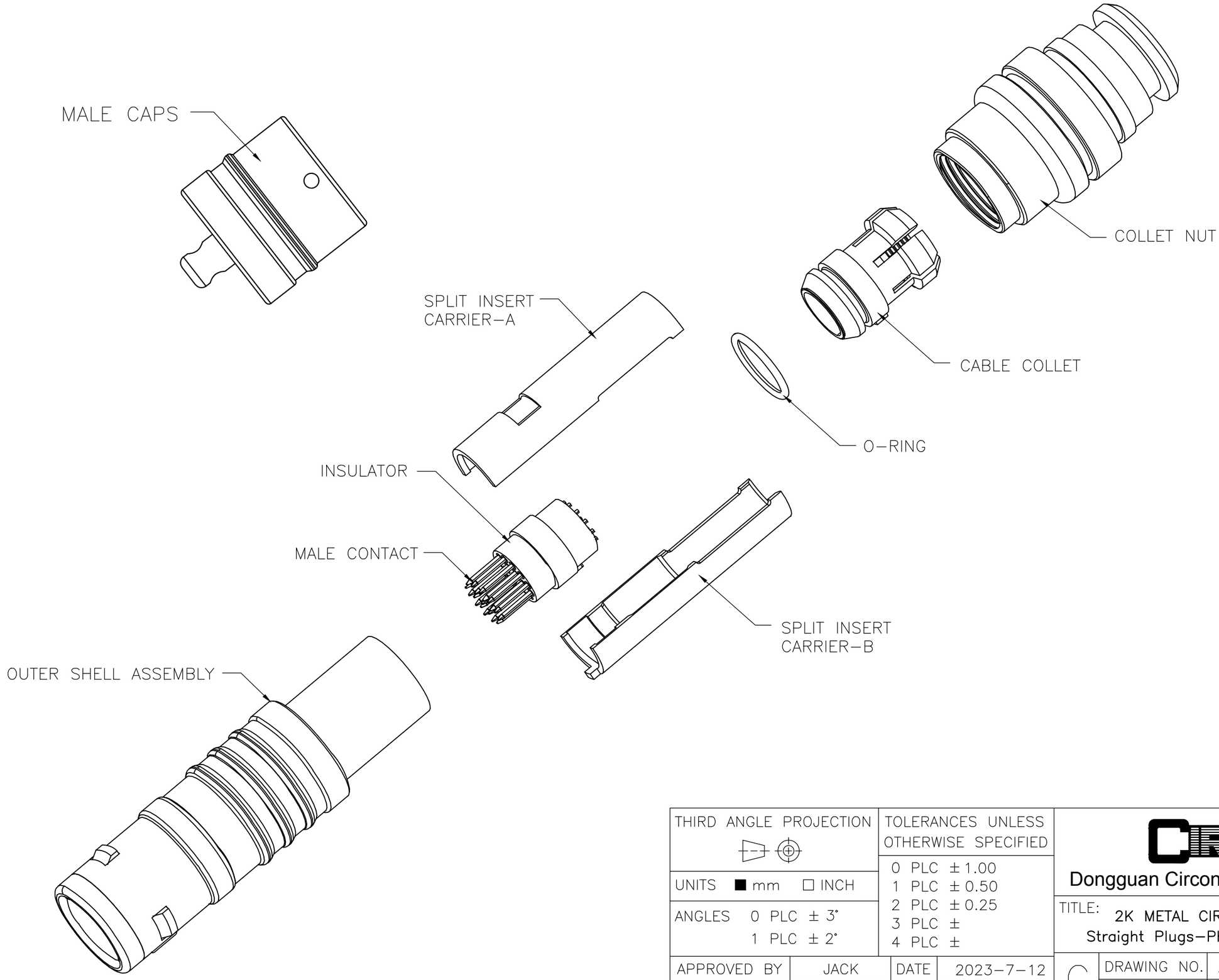

REV.	REVISION DESCRIPTION	ECR/ECN NO.	DATE	DRAWN BY	ANDY	DATE	2023–7–12

THIRD ANGLE PROJECTION

UNITS ■ mm □ INCH

ANGLES 0 PLC ± 3°
1 PLC ± 2°

TOLERANCES UNLESS OTHERWISE SPECIFIED

0 PLC ± 1.00
1 PLC ± 0.50
2 PLC ± 0.25
3 PLC ±
4 PLC ±

APPROVED BY	JACK	DATE	2023–7–12
CHECKED BY	CHARLES	DATE	2023–7–12

Dongguan Circon Technology Co.,Ltd.

TITLE: 2K METAL CIRCULAR CONNECTOR
Straight Plugs–Photoelectric conversion

C	DRAWING NO.	A–M–405	REV. A0
	PART NO.	2KHM1P219G60G	

SIZE: A3 | SCALE: 1:1 | SHEET: 2 OF 2