3K MRTAL CIRCULAR ASSEMBLY P/N DESCRIPTION :

3K A S1 X X XX X XX A
① ② ③ ④ ⑤

① Insert
P=PEEK
1=PPS

② Plating
2=High Gold
A=Gold flash

③ Number of contacts
02=2Pin
:
:
:
32=32Pin

④ Keying
G=0° C=60° F=145°
A=30° D=95° L=75°
B=45° E=120°

⑤ Cable collet
30=3.0mm (Cable⌀2.6~3.0mm)
35=3.5mm (Cable⌀3.1~3.5mm)
40=4.0mm (Cable⌀3.6~4.0mm)
45=4.5mm (Cable⌀4.1~4.5mm)
50=5.0mm (Cable⌀4.6~5.0mm)
55=5.5mm (Cable⌀5.1~5.5mm)
60=6.0mm (Cable⌀5.6~6.0mm)
65=6.5mm (Cable⌀6.1~6.5mm)
70=7.0mm (Cable⌀6.6~7.0mm)
75=7.5mm (Cable⌀7.1~7.5mm)
80=8.0mm (Cable⌀7.6~8.0mm)
85=8.5mm (Cable⌀8.1~8.5mm)
90=9.0mm (Cable⌀8.6~9.0mm)
95=9.5mm (Cable⌀9.1~9.5mm)
10=10.0mm (Cable⌀9.6~10.0mm)
11=10.5mm (Cable⌀10.1~10.5mm)

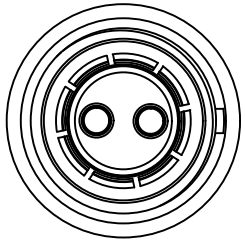

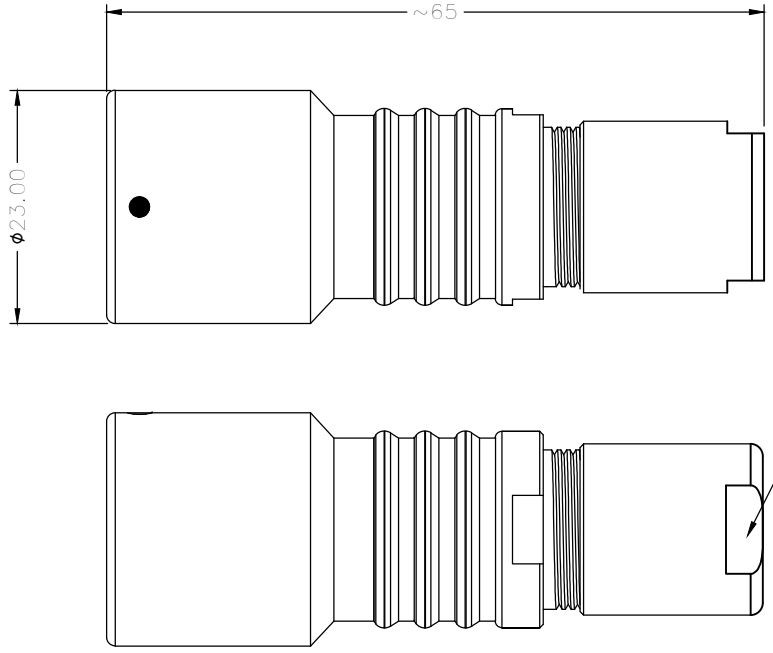

NOTE:

1. MATERIAL:

1.1.SHELL ASSEMBLY: COPPER ALLOY,OUTER SHELL Cr PLATING,
OTHER METALLIC COMPONENTS Ni PLATING

1.2.INSERT: THERMOPLASTIC,UL94V-0

1.3.CENTER CONTACT : COPPER ALLOY,Au PLATING

1.4.O-RING : ELASTOMER

2.NUMBER OF CONTACT : 2 TO 32 POSITION

3.RoHS DIRECTIVE COMPLIANCE

REV.	REVISION DESCRIPTION	ECR/ECN NO.	DATE

THIRD ANGLE PROJECTION		TOLERANCES UNLESS OTHERWISE SPECIFIED	
UNITS ■ mm □ INCH		0 PLC ± 1.00 1 PLC ± 0.50 2 PLC ± 0.25 3 PLC ± 4 PLC ±	
ANGLES 0 PLC ± 3 1 PLC ± 2			
APPROVED BY	JACK	DATE	2021-8-5
CHECKED BY	CHARLES	DATE	2021-8-5
DRAWN BY	ANDY	DATE	2021-8-5

Dongguan Circon Technology Co.,Ltd.

TITLE: 3K METAL CIRCULAR CONNECTOR FREE SOCKETS

C	DRAWING NO.	A-M-246	REV. A0
	PART NO.	3KAS1XXXXXXXA	

SIZE: A3 | SCALE: 1:1 | SHEET: 1 OF 3

KEYING ANGLES (RECEPTACLE FRONT VIEW):

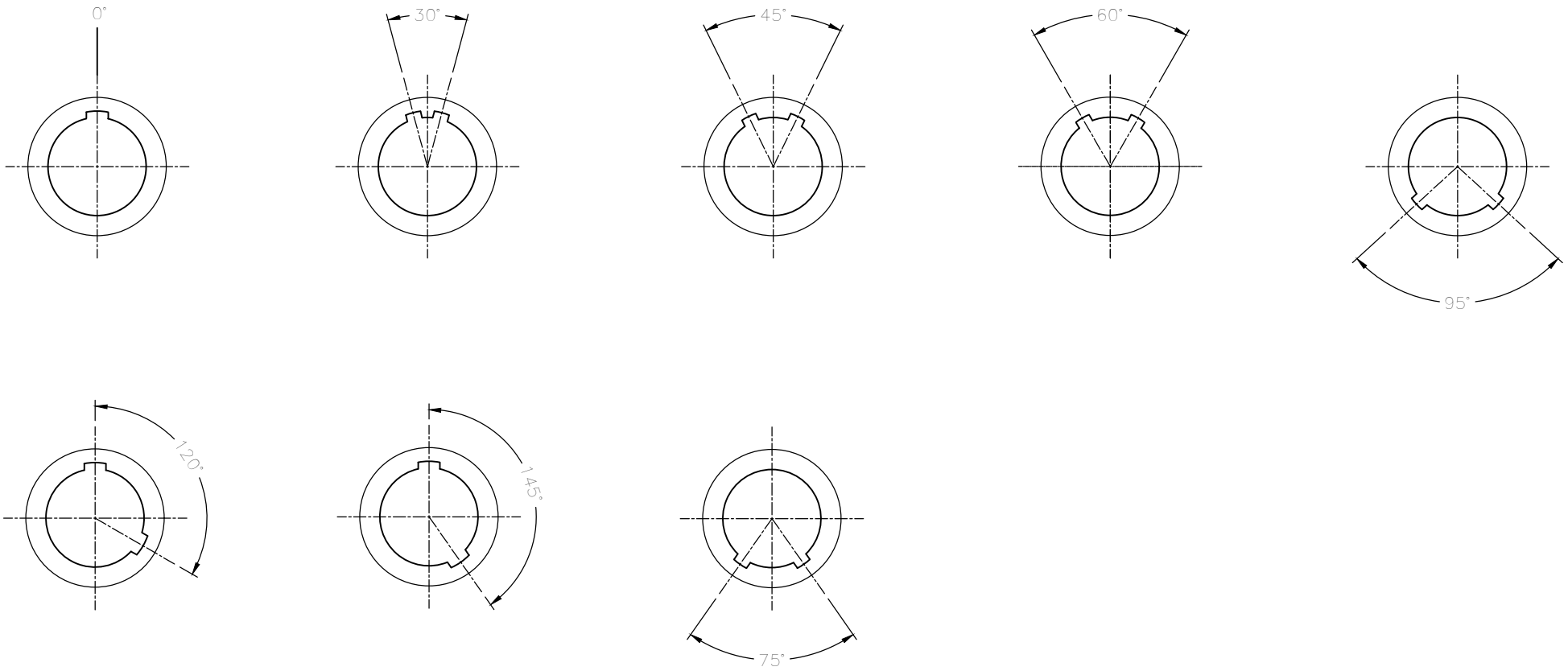

THIRD ANGLE PROJECTION	TOLERANCES UNLESS OTHERWISE SPECIFIED	Dongguan Circon Technology Co.,Ltd.			
UNITS ■ mm □ INCH	0 PLC ± 1.00 1 PLC ± 0.50 2 PLC ± 0.25 3 PLC ± 4 PLC ±	TITLE: 3K METAL CIRCULAR CONNECTOR FREE SOCKETS			
ANGLES 0 PLC ± 3 1 PLC ± 2		C	DRAWING NO. A-M-246		REV. A0
			PART NO. 3KAS1XXXXXXXA		
APPROVED BY JACK	DATE 2021-8-5				
CHECKED BY CHARLES	DATE 2021-8-5				
DRAWN BY ANDY	DATE 2021-8-5	SIZE: A3	SCALE: 1:1	SHEET: 2 OF 3	

REV.	REVISION DESCRIPTION	ECR/ECN NO.	DATE

VIEW FROM TERMINATION SIDE PIN PART

2 POS.

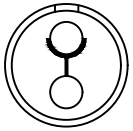

3 POS.



4 POS.

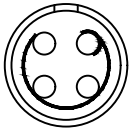

5 POS.



6 POS.



7 POS.



8 POS.



10 POS.



12 POS.

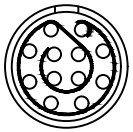

14 POS.



16 POS.



18 POS.

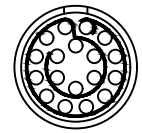

20 POS.

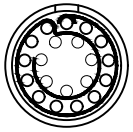

22 POS.



24 POS.



26 POS.

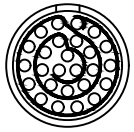

30 POS.

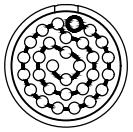

32 POS.

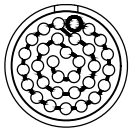

THIRD ANGLE PROJECTION		TOLERANCES UNLESS OTHERWISE SPECIFIED		Dongguan Circon Technology Co.,Ltd.	
UNITS ■ mm □ INCH		0 PLC ± 1.00 1 PLC ± 0.50 2 PLC ± 0.25 3 PLC ± 4 PLC ±		TITLE: 3K METAL CIRCULAR CONNECTOR FREE SOCKETS	
ANGLES 0 PLC ± 3 1 PLC ± 2				C	DRAWING NO. A-M-246 / PART NO. 3KAS1XXXXXXXA / REV. A0
APPROVED BY	JACK	DATE	2021-8-5		
CHECKED BY	CHARLES	DATE	2021-8-5		
DRAWN BY	ANDY	DATE	2021-8-5	SIZE: A3	SCALE: 1:1 / SHEET: 3 OF 3

REV.	REVISION DESCRIPTION	ECR/ECN NO.	DATE