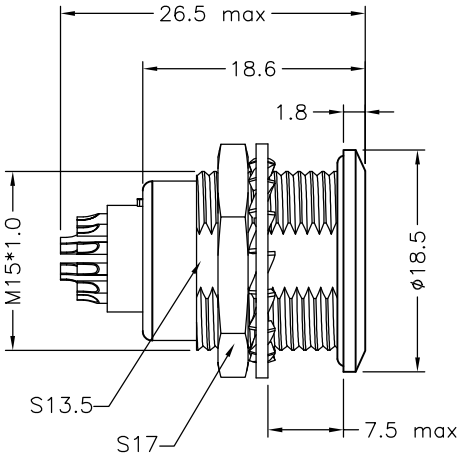

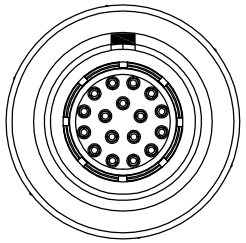

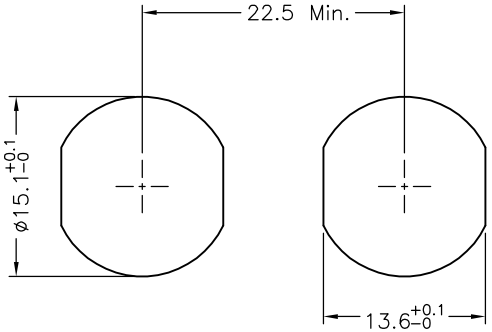

PANEL CUT-OUT

1T METAL CIRCULAR ASSEMBLY P/N DESCRIPTION :

2T A F2 X X XX X 00C
①②③ ④

① Insert
P=PEEK
1=PPS

② Plating
2=High Gold
A=Gold flash

③ Number of contacts
02=2Pin
⋮
32=32Pin

④ Keying
G= 0°
A= 30°
D=135°
L= 80°
J= 45°

NOTE:

1. MATERIAL:

1.1.SHELL ASSEMBLY: COPPER ALLOY,OUTER SHELL Cr PLATING, OTHER METALLIC COMPONENTS Ni PLATING

1.2.INSERT: THERMOPLASTIC,UL94V-0

1.3.CENTER CONTACT : COPPER ALLOY,Au PLATING

1.4.O-RING : ELASTOMER

2.NUMBER OF CONTACT : 2 TO 32 POSITION

3.RoHS DIRECTIVE COMPLIANCE

THIRD ANGLE PROJECTION		TOLERANCES UNLESS OTHERWISE SPECIFIED	
UNITS ■ mm □ INCH		0 PLC ± 1.00 1 PLC ± 0.50 2 PLC ± 0.25 3 PLC ± 4 PLC ±	
ANGLES 0 PLC ± 3 1 PLC ± 2			
APPROVED BY	JACK	DATE	2022-9-5
CHECKED BY	CHARLES	DATE	2022-9-5
DRAWN BY	ANDY	DATE	2022-9-5

Dongguan Circon Technology Co.,Ltd.

TITLE: 2T METAL CIRCULAR CONNECTOR FIXED SOCKET

C	DRAWING NO.	A-M-194	REV. A0
	PART NO.	2TAF2XXXXX00C	
SIZE: A3	SCALE: 1:1	SHEET: 1 OF 2	

REV.	REVISION DESCRIPTION	ECR/ECN NO.	DATE

VIEW FROM TERMINATION SIDE PIN PART

2 POS.

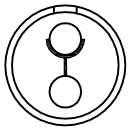

3 POS.



4 POS.

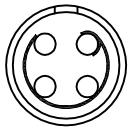

5 POS.

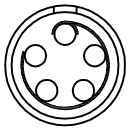

6 POS.



7 POS.

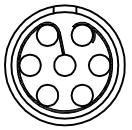

8 POS.

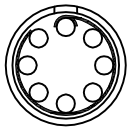

10 POS.



12 POS.



14 POS.



16 POS.



18 POS.



19 POS.

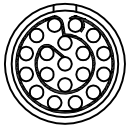

26 POS.

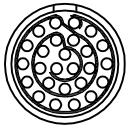

32 POS.

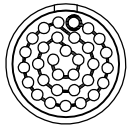

KEYING ANGLES (RECEPTACLE FRONT VIEW):

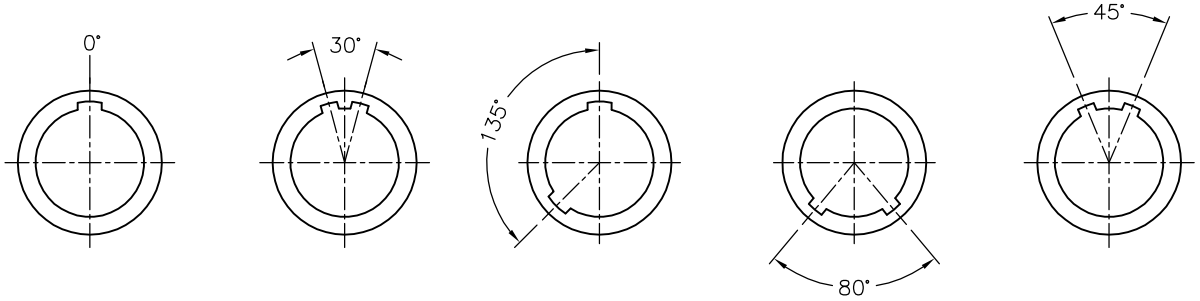

THIRD ANGLE PROJECTION		TOLERANCES UNLESS OTHERWISE SPECIFIED	0 PLC ± 1.00 1 PLC ± 0.50 2 PLC ± 0.25 3 PLC ± 4 PLC ±
UNITS ■ mm □ INCH			
ANGLES 0 PLC ± 3 1 PLC ± 2			
APPROVED BY	JACK	DATE	2022-9-5
CHECKED BY	CHARLES	DATE	2022-9-5
DRAWN BY	ANDY	DATE	2022-9-5

Dongguan Circon Technology Co.,Ltd.

TITLE: 2T METAL CIRCULAR CONNECTOR FIXED SOCKET

C	DRAWING NO.	A-M-194	REV. A0
	PART NO.	2TAF2XXXXX00C	
SIZE: A3	SCALE: 1:1	SHEET: 2 OF 2	

REV.	REVISION DESCRIPTION	ECR/ECN NO.	DATE