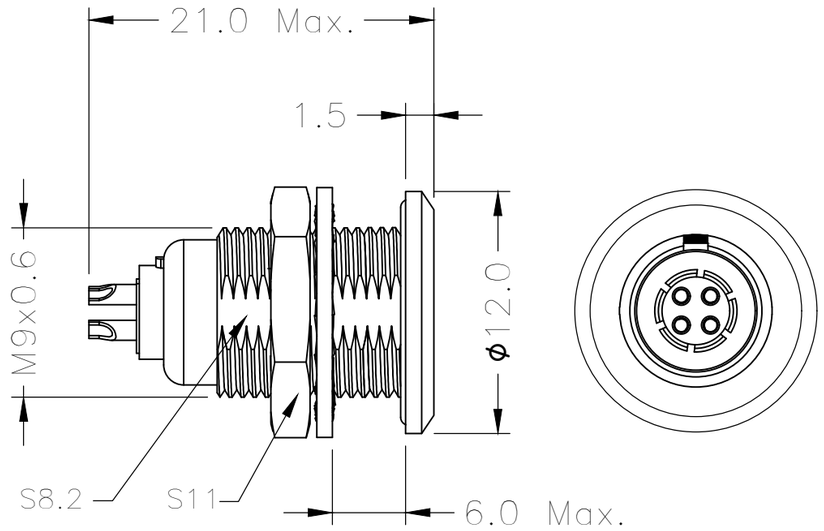

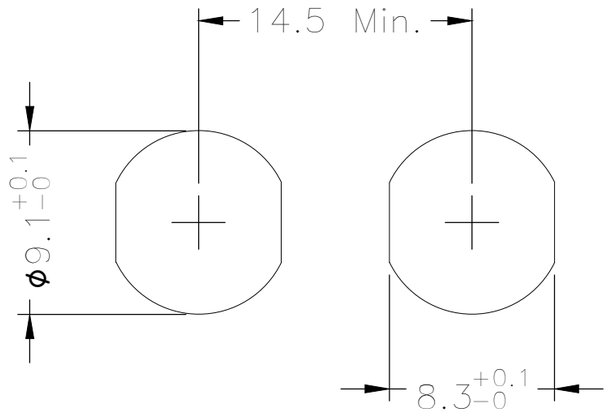

PANEL CUT-OUT

OT METAL CIRCULAR ASSEMBLY P/N DESCRIPTION :

OT A F2 X X XX X 00C
① ② ③ ④

① Insert
P=PEEK
1=PPS

② Plating
2=High Gold
A=Gold flash

③ Number of contacts
02=2Pin
⋮
09=9Pin

④ Keying
G= 0°
A= 30°
D=135°
L= 80°
J= 45°

NOTE:

1. MATERIAL:

1.1.SHELL ASSEMBLY: COPPER ALLOY,OUTER SHELL Cr PLATING,
OTHER METALLIC COMPONENTS Ni PLATING

1.2.INSERT: THERMOPLASTIC,UL94V-0

1.3.CENTER CONTACT : COPPER ALLOY,Au PLATING

1.4.O-RING : ELASTOMER

2.NUMBER OF CONTACT : 2 TO 9 POSITION

3.RoHS DIRECTIVE COMPLIANCE

REV.	REVISION DESCRIPTION	ECR/ECN NO.	DATE

THIRD ANGLE PROJECTION

UNITS ■ mm □ INCH

ANGLES 0 PLC ± 3
1 PLC ± 2

TOLERANCES UNLESS OTHERWISE SPECIFIED
0 PLC ± 1.00
1 PLC ± 0.50
2 PLC ± 0.25
3 PLC ±
4 PLC ±

APPROVED BY	JACK	DATE	2021-4-28
CHECKED BY	CHARLES	DATE	2021-4-28
DRAWN BY	ANDY	DATE	2021-4-28

Dongguan Circon Technology Co.,Ltd.

TITLE: OT METAL CIRCULAR CONNECTOR FIXED SOCKET

C	DRAWING NO.	A-M-217	REV. A0
	PART NO.	OTAF2XXXXX00C	

SIZE: A3 | SCALE: 1:1 | SHEET: 1 OF 2

KEYING ANGLES (RECEPTACLE FRONT VIEW):

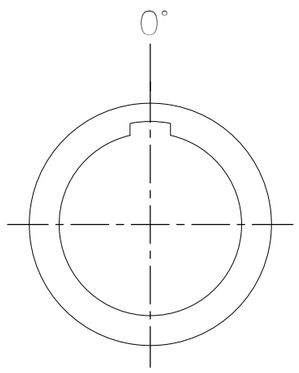

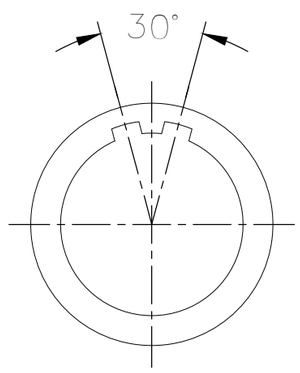

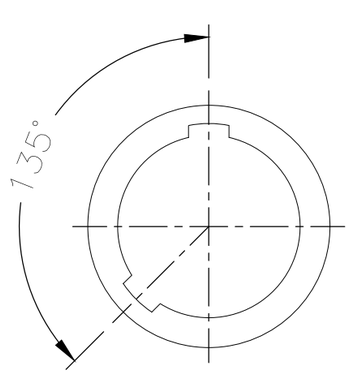

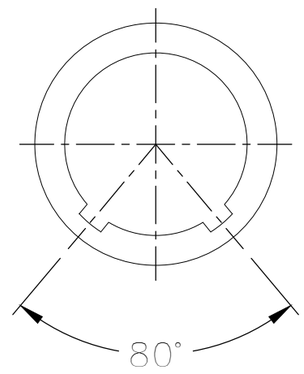

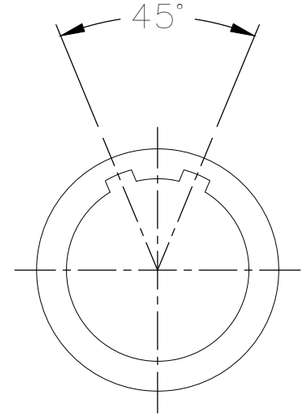

VIEW FROM TERMINATION SIDE PIN PART:

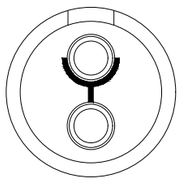

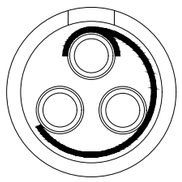

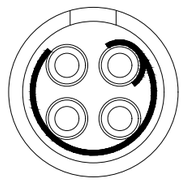

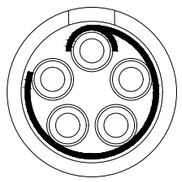

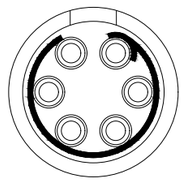

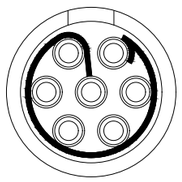

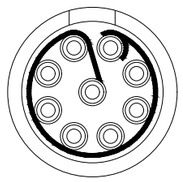

THIRD ANGLE PROJECTION		TOLERANCES UNLESS OTHERWISE SPECIFIED	
UNITS ■ mm □ INCH		0 PLC ± 1.00 1 PLC ± 0.50 2 PLC ± 0.25 3 PLC ± 4 PLC ±	Dongguan Circon Technology Co.,Ltd.
ANGLES 0 PLC ± 3 1 PLC ± 2			TITLE: OT METAL CIRCULAR CONNECTOR FIXED SOCKET
APPROVED BY	JACK	DATE 2021-4-28	C DRAWING NO. A-M-217 REV. A0
CHECKED BY	CHARLES	DATE 2021-4-28	PART NO. OTAF2XXXXX00C
DRAWN BY	ANDY	DATE 2021-4-28	SIZE: A3 SCALE: 1:1 SHEET: 2 OF 2

REV.	REVISION DESCRIPTION	ECR/ECN NO.	DATE