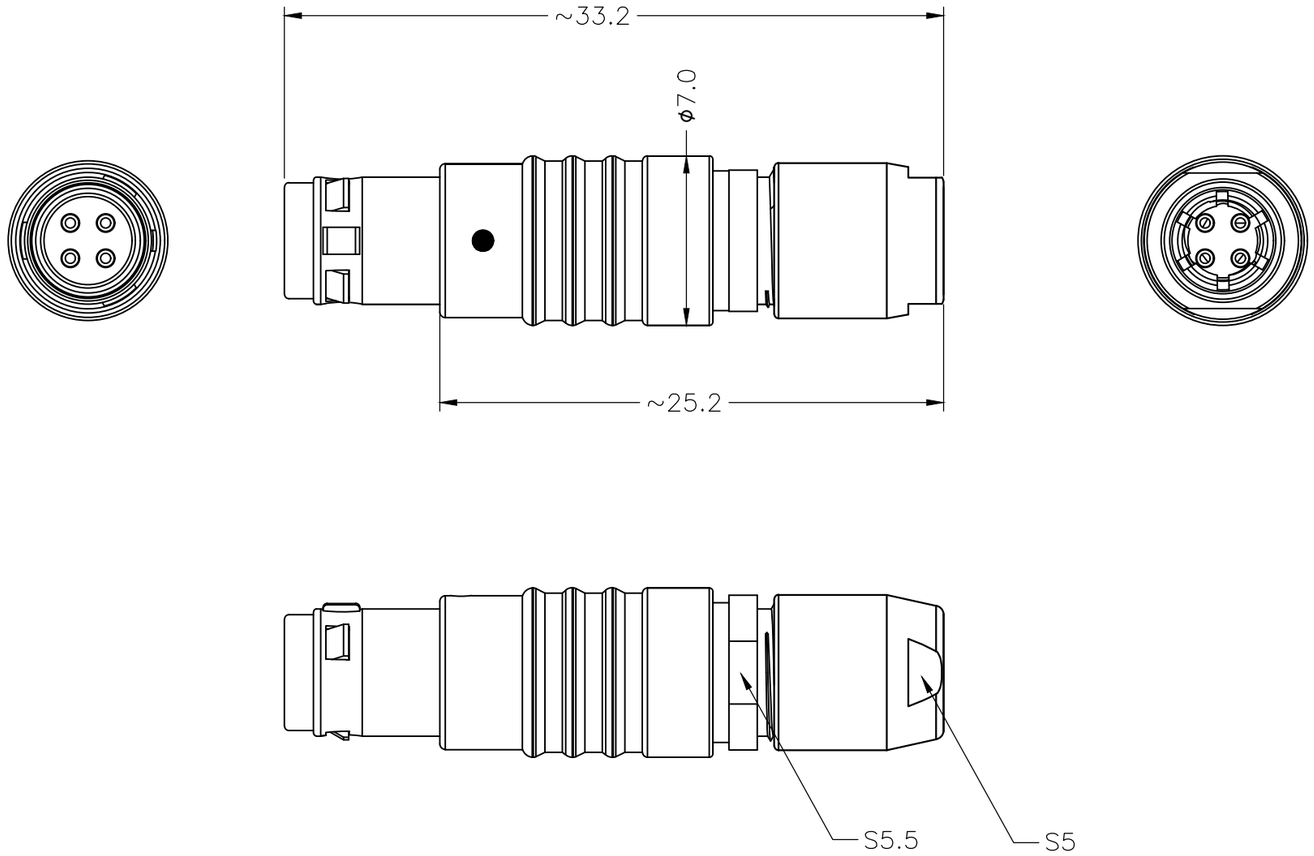

TT METAL CIRCULAR ASSEMBLY P/N DESCRIPTION :

TT A M1 X X XX X XX A
① ② ③ ④ ⑤

① Insert
P=PEEK
1=PPS

② Plating
2=High Gold
A=Gold flash

③ Number of contacts
02=2Pin
⋮
06=6Pin

④ Keying
G= 0°
A= 30°
D=135°
L= 80°
J= 45°

⑤ Cable collet
27=2.7mm (Cableø2.4~2.6mm)
31=3.1mm (Cableø2.7~3.0mm)

NOTE:

1. MATERIAL:

1.1.SHELL ASSEMBLY: COPPER ALLOY,OUTER SHELL AND COLLET NUT Cr PLATING, OTHER METALLIC COMPONENTS Ni PLATING

1.2.INSERT: THERMOPLASTIC,UL94V-0

1.3.CENTER CONTACT : COPPER ALLOY,Au PLATING

1.4.GASKET : ELASTOMER

2.NUMBER OF CONTACT : 2 TO 6 POSITION

3.RoHS DIRECTIVE COMPLIANCE

THIRD ANGLE PROJECTION		TOLERANCES UNLESS OTHERWISE SPECIFIED	
UNITS ■ mm □ INCH		0 PLC ± 1.00 1 PLC ± 0.50 2 PLC ± 0.25 3 PLC ± 4 PLC ±	
ANGLES 0 PLC ± 3° 1 PLC ± 2°			
APPROVED BY	JACK	DATE	2022-11-30
CHECKED BY	CHARLES	DATE	2022-11-30
DRAWN BY	ANDY	DATE	2022-11-30

Dongguan Circon Technology Co.,Ltd.

TITLE: TT METAL CIRCULAR CONNECTOR STRAIGHT PLUGS

C	DRAWING NO.	A-M-328	REV. A0
	PART NO.	TTAM1XXXXXXXA	
SIZE: A3	SCALE: 1:1	SHEET: 1 OF 2	

REV.	REVISION DESCRIPTION	ECR/ECN NO.	DATE

KEYING (PLUG FRONT VIEW)

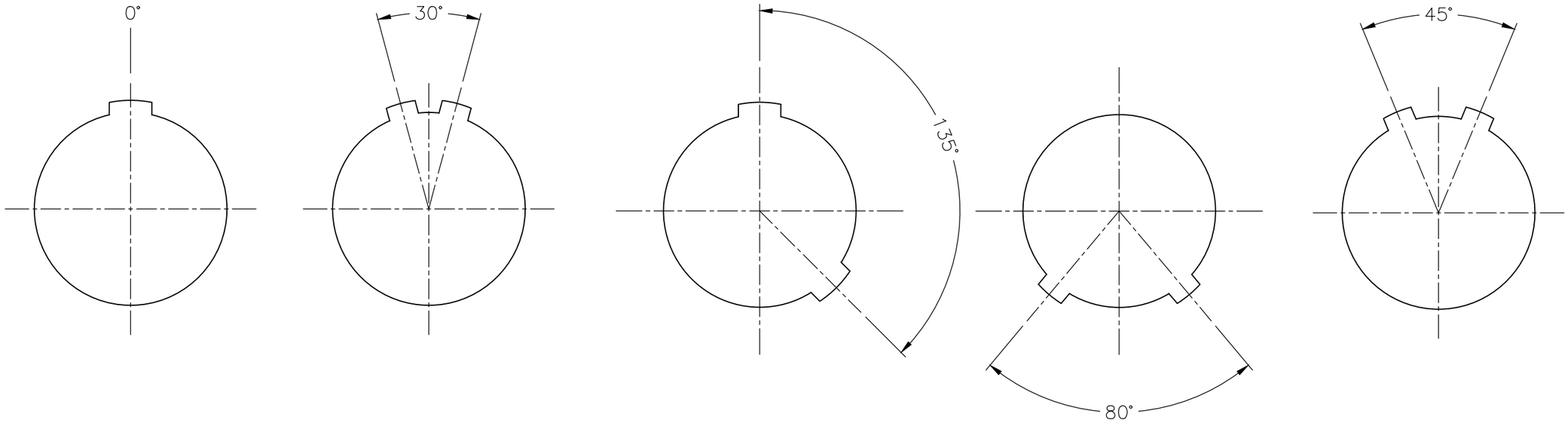

VIEW FROM TERMINATION SIDE PIN PART

2 PIN

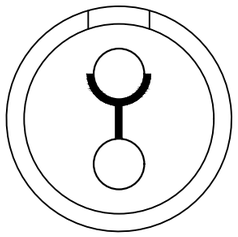

3 PIN

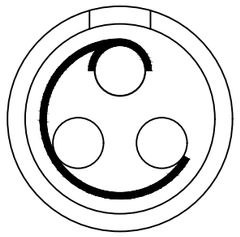

4 PIN

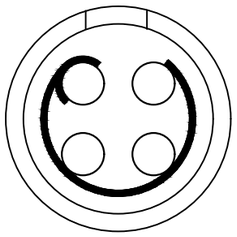

5 PIN

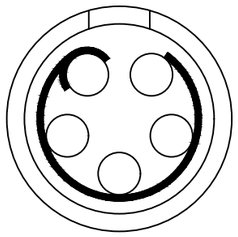

6 PIN

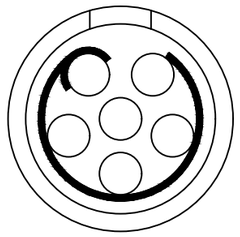

REV.	REVISION DESCRIPTION	ECR/ECN NO.	DATE

THIRD ANGLE PROJECTION

UNITS ■ mm □ INCH

ANGLES 0 PLC ± 3°
1 PLC ± 2°

TOLERANCES UNLESS OTHERWISE SPECIFIED

0 PLC ± 1.00
1 PLC ± 0.50
2 PLC ± 0.25
3 PLC ±
4 PLC ±

APPROVED BY	JACK	DATE	2022-11-30
CHECKED BY	CHARLES	DATE	2022-11-30
DRAWN BY	ANDY	DATE	2022-11-30

CIRCON®

Dongguan Circon Technology Co.,Ltd.

TITLE: TT METAL CIRCULAR CONNECTOR STRAIGHT PLUGS

C	DRAWING NO.	A-M-328	REV. A0
	PART NO.	TTAM1XXXXXXXA	

SIZE: A3 | SCALE: 1:1 | SHEET: 2 OF 2