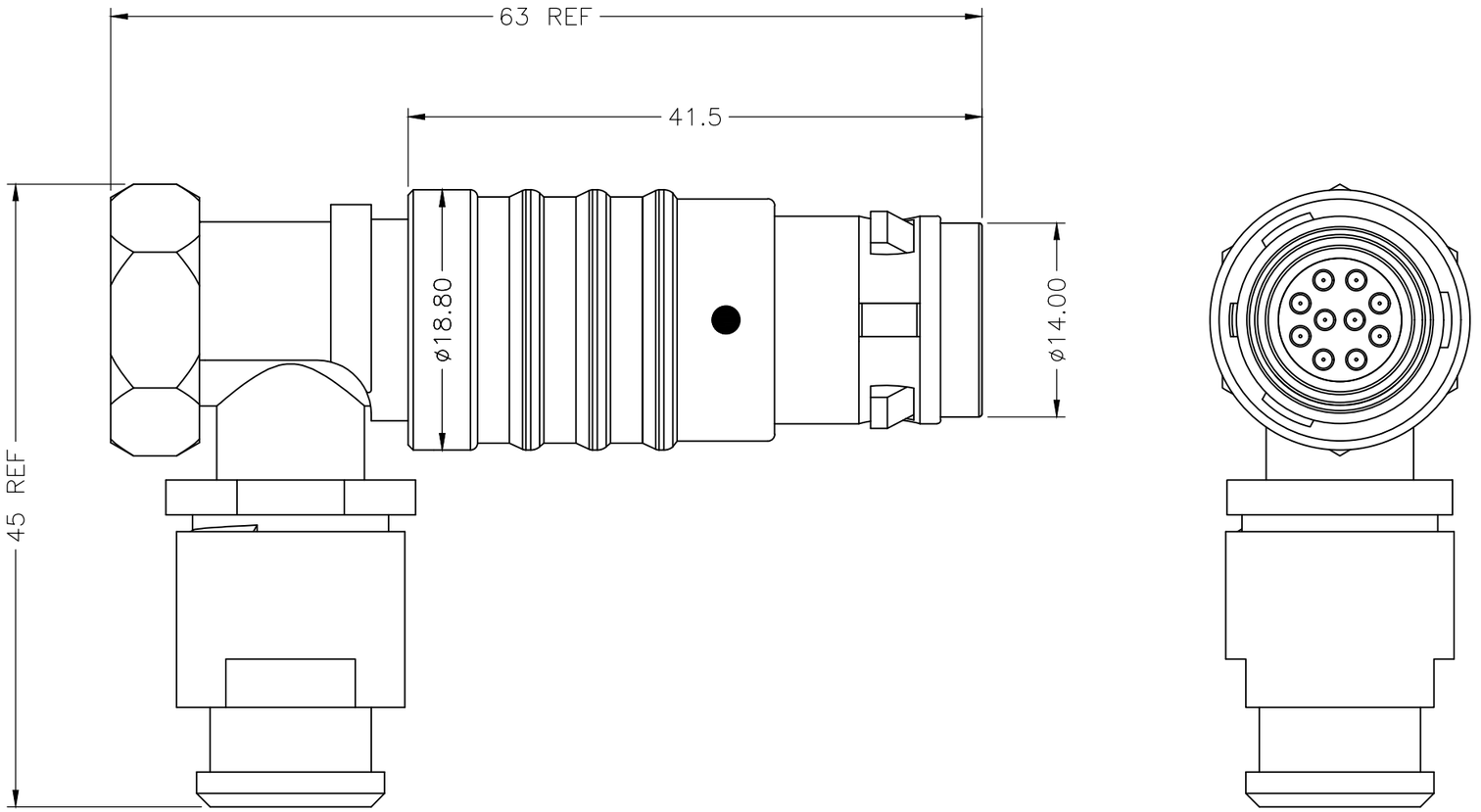

3T MRTAL CIRCULAR ASSEMBLY P/N DESCRIPTION :

3T A M3 12 10 0 XX B
① Cable collet

① Cable collet
82=8.2mm (Cableø7.2~8.2mm)
92=9.2mm (Cableø8.2~9.2mm)
99=9.9mm (Cableø9.2~9.9mm)

NOTE:

1. MATERIAL:

1.1.SHELL: COPPER ALLOY,Cr(BLACK) PLATING

1.2.SPRING: COPPER ALLOY,Ni PLATING

1.3.OTHER METALLIC COMPONENTS: COPPER ALLOY, Ni PLATING

1.4.INSERT: THERMOPLASTIC–PEEK,UL94V–0

1.5.CONTACT: COPPER ALLOY,Au PLATING

1.6.GASKET: ELASTOMER

2.RoHS DIRECTIVE COMPLIANCE

REV.	REVISION DESCRIPTION	ECR/ECN NO.	DATE

THIRD ANGLE PROJECTION	TOLERANCES UNLESS OTHERWISE SPECIFIED	Dongguan Circon Technology Co.,Ltd.	
UNITS ■ mm □ INCH	0 PLC ± 1.00 1 PLC ± 0.50 2 PLC ± 0.25 3 PLC ± 4 PLC ±	TITLE: 3T METAL CIRCULAR CONNECTOR 90° PLUGS	
ANGLES 0 PLC ± 3 1 PLC ± 2		C	DRAWING NO. A–M–065 / PART NO. 3TAM312100XXB / REV. A0
APPROVED BY: JACK	DATE: 2019–1–22		
CHECKED BY: CHARLES	DATE: 2019–1–22		
DRAWN BY: ANDY	DATE: 2019–1–22	SIZE: A3	SCALE: 1:1 / SHEET: 1 OF 2

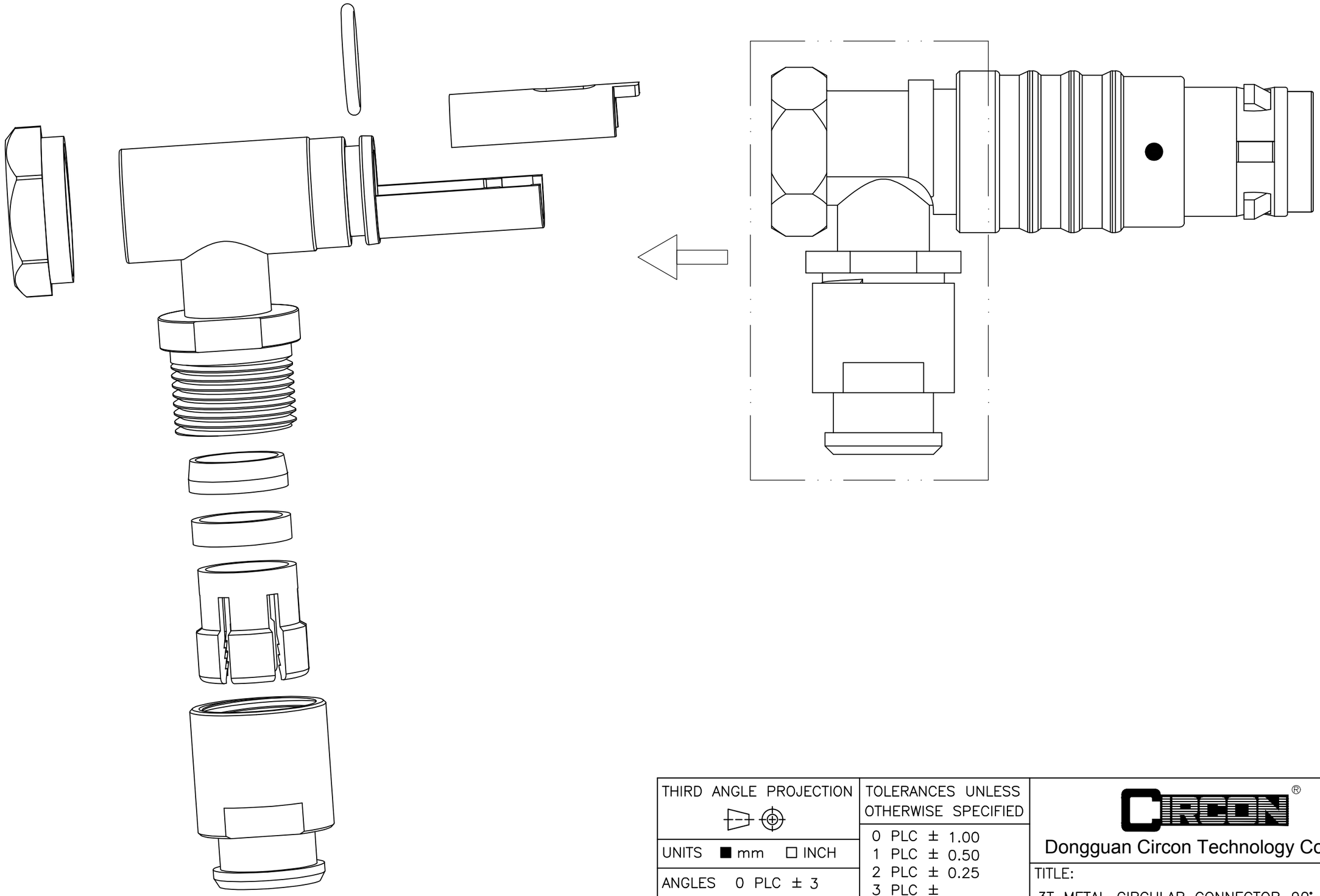

THIRD ANGLE PROJECTION	TOLERANCES UNLESS OTHERWISE SPECIFIED		
UNITS ■ mm □ INCH	0 PLC ± 1.00 1 PLC ± 0.50 2 PLC ± 0.25 3 PLC ± 4 PLC ±		
ANGLES 0 PLC ± 3 1 PLC ± 2			

CIRCON®

Dongguan Circon Technology Co.,Ltd.

TITLE:

3T METAL CIRCULAR CONNECTOR 90° PLUGS

APPROVED BY	JACK	DATE	2019-1-22
CHECKED BY	CHARLES	DATE	2019-1-22
DRAWN BY	ANDY	DATE	2019-1-22

C	DRAWING NO.	A-M-065	REV. A0
	PART NO.	3TAM312100XXB	
SIZE: A3	SCALE: 1:1	SHEET: 2 OF 2	

REV.	REVISION DESCRIPTION	ECR/ECN NO.	DATE